MOVE THE WORLD FORWARD MITSUBISHI HEAVY INDUSTRIES GROUP

GRENDiA ES

FG15 - 35(C)N / FD20-35N3 Series

DIESEL AND LPG COUNTERBALANCE TRUCKS

1.5 – 3.5 tonnes

POWER UP PERFORMANCE... DRIVE DOWN RUNNING COSTS

Developed to help your operator achieve maximum productivity, while minimising running costs, GRENDiA ES sets the highest standards for IC engine counterbalance forklift trucks.



SPECIFICATIONS

FG15N	
FG18N	
FG20CN	
FG20N	FD20N3
FG25N	FD25N3
FG30N	FD30N3
FG35N	FD35N3

WHEN RELIABILITY IS EVERYTHING...

MITSUBISHI FORKLIFT TRUCKS

GRENDiA ES

FG15 - 35(C)N / FD20-35N3 Series

DIESEL AND LPG COUNTERBALANCE TRUCKS

1.5 – 3.5 tonnes



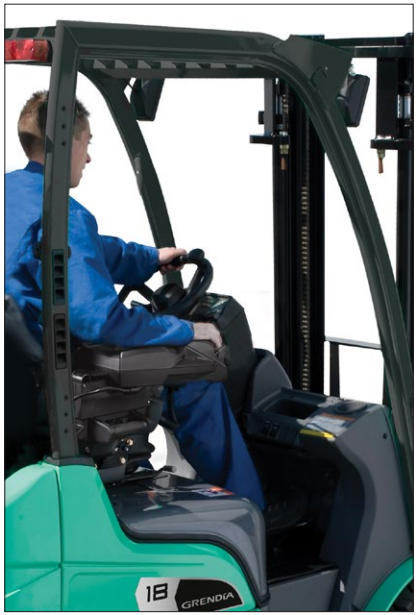

With its exceptional fuel economy, durable components and low-maintenance design, GRENDiA makes perfect business sense. What's more, it comes with a package of advanced features, fitted as standard, that offers true value for money.

Fast, stable and exceptionally powerful, GRENDiA forklift trucks offer a potent combination of high efficiency and low emissions in line with Euro Stage V regulations.

To that, Mitsubishi Forklift Trucks has added a host of ergonomic features to maximise comfort, control and precision. The result is a forklift that can be relied upon to deliver top performance, whatever the application, whatever the conditions.

FRAME AND BODY

- **Robust construction** has been designed and rigorously tested to ensure high stability, rigidity and protection.
- **Full belly guard construction** protects engine compartment from any ingress – including dirt, dust and water – for long engine life.
- **Compact design** allows for reduced aisle dimensions, ensuring cost-effective operations.

MAST AND FORK ASSEMBLY

- **Heavy-duty clear-view mast** offers market-leading vision of fork tip and load, for faster cycle times and reduced damage.
- **New bearing high-strength carriage** features six bearings, allowing for quicker load handling.

DRIVE

- **Advanced common rail diesel technology,** diesel particulate filters (DPF) and diesel oxidation catalysts (DOC) ensure clean and efficient fuel consumption, as well as low noise.
- **Three-way catalytic converter** – fitted as standard – significantly reduces exhaust emissions to one of the industry's lowest levels. (LPG models only.)
- **Advanced speed control** – as standard on diesel models – restricts speed while still maintaining full power on ramps.
- **Engine management controller** allows for simultaneous, multiple engine and electronic functions, resulting in industry-leading fuel consumption and lower emissions.

STEERING SYSTEM

- **Fully hydrostatic steering** is responsive, precise and effortless for the operator and requires little maintenance.
- **Rugged rear axle assembly** with metal bush mounts (instead of competitors' more fragile rubber mounts) is extremely durable.

BRAKES

- **Fully hydrostatic drum brakes** give excellent control with little effort and are easy to maintain.

HYDRAULICS

- **Powerful hydraulic system** offers high residual capacities for comfortable handling of heavier loads.

ELECTRICAL AND CONTROL SYSTEMS

- **Integrated Presence System (IPS)** prevents all movement of the truck and its mast if the operator is not seated, as well as providing a seatbelt warning light and parking brake alarm.
- **Onboard diagnostics and detailed fault diagnosis** via computer connection alerts operators and service engineers to problems, speeds up servicing and prevents damage.
- **LED lights** fitted as standard for 'see-and-be-seen' safety.





There is more information on GRENDIA ES on mitforklift.com

For more extensive information please visit our website mitforklift.com

mft2.eu/grendiaesd

GRENDIA ES

FG15 - 35(C)N / FD20-35N3 Series

DIESEL AND LPG COUNTERBALANCE TRUCKS

1.5 – 3.5 tonnes

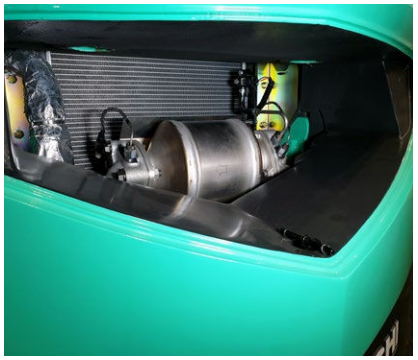



OPERATOR COMPARTMENT AND CONTROLS

- **All-round visibility** together with ergonomic design and layout of all controls improves comfort, reduces fatigue, increases precision and raises productivity.
- **Fully adjustable, full-suspension Grammer seat** with hip restraints and safety belt keeps driver comfortable through the longest of shifts.
- **Automotive-style pedals** with optimum pedal angle are easy to use and give good control without leg strain.
- **Adjustable steering column** with memory function helps guarantee optimum driving position, every time.
- **Cowl-mounted hydraulic levers** provide easy-to-reach, easy-to-use control of mast operations.
- **Low noise level** at operator's ear (just 78 dBA) and low vibration from powertrain increase comfort and reduce fatigue.
- **Clear, informative meter panel** includes essential warning lights and LCD display with speedometer, soot level indicator, clock and dual hour meter.
- **Delux Cabin** offering outstanding visibility through laminates glass, and all-round protection from weather elements.

OTHER FEATURES

- **Rapid access features** give quick and easy entry to all areas for checks and servicing.
- **Long service interval** and choice of high-quality components, together with low-maintenance design, minimises downtime and cost of ownership.
- **Sealed wheel arches** together with belly guard significantly reduces dust emitted during operations for clean performance.

INTEGRATED PRESENCE SYSTEM (IPS) PROVIDES:

IPS INTEGRATED PRESENCE SYSTEM

- a hydraulic and travel interlock system that prevents all movement of the truck and its mast if the driver is not seated
- a seat belt warning light
- a parking brake alarm





There is more information on GRENDIA ES on mitforklift.com

For more extensive information please visit our website mitforklift.com

mft2.eu/grendiaesg

Continuing improvement may lead to changes in these specifications

VDI - PERFORMANCE & DIMENSIONS

	CHARACTERISTICS						
1.1	Manufacturer			Mitsubishi Forklift Trucks	Mitsubishi Forklift Trucks	Mitsubishi Forklift Trucks	Mitsubishi Forklift Trucks
1.2	Manufacturer's model designation			FD20N3	FD25N3	FD30N3	FD35N3
1.3	Power source			Diesel	Diesel	Diesel	Diesel
1.4	Operator type			Seated	Seated	Seated	Seated
1.5	Load capacity	Q	kg	2000	2500	3000	3500
1.6	Load center distance	c	mm	500	500	500	500
1.8	Load distance, axle to fork face	x	mm	455	460	495	495
1.9	Wheelbase	y	mm	1600	1600	1700	1700
	WEIGHT						
2.1	Truck weight, without load / including battery (simple x mast, lowest lift height)		kg	3460	3760	4430	4820
2.2	Axle loading with ma x imum load, front / rear (simple x mast, lowest lift height)		kg	4670 / 790	5460 / 800	6530 / 900	7240 / 1080
2.3	Axle loading without load, front / rear (simple x mast, lowest lift height)		kg	1470 / 1990	1460 / 2300	1780 / 2650	1700 / 3120
	WHEELS, DRIVE TRAIN						
3.1	Tyres: V=solid, L=pneumatic, SE=solid pneumatic - front / rear			SE / SE	SE / SE	SE / SE	SE / SE
3.2	Tyre dimensions, front			7.00 - 12 - 12PR	7.00 - 12 - 12PR	28x9 - 15 - 12PR	250 - 15 - 12PR
3.3	Tyre dimensions, rear			6.00 - 9 - 10PR	6.00 - 9 - 10PR	6.50 - 10 - 10PR	6.50 - 10 - 10PR
3.5	Number of wheels, front / rear (x =driven)			2 x / 2	2 x / 2	2 x / 2	2 x / 2
3.6	Track width (centre of tyres), front	b10	mm	960	960	1060	1060
3.7	Track width (centre of tyres), rear	b11	mm	980	980	980	980
	DIMENSIONS						
4.1	Mast tilt, forwards / backwards			6 / 10	6 / 10	6 / 10	6 / 10
4.2	Height with mast lowered (see tables)	h1	mm	2150	2150	2170	2300
4.3	Free lift (see tables)	h2	mm	140	140	145	145
4.4	Lift height (see tables)	h3	mm	3300	3300	3270	3300
4.5	Overall height with mast raised	h4	mm	4355	4360	4330	4360
4.7	Height to top of overhead guard	h6	mm	2145	2145	2165	2175
4.8	Seat height	h7	mm	940	940	990	990
4.12	Tow coupling height	h10	mm	310	310	330	340
4.19	Overall length	l1	mm	3555	3630	3805	3865
4.20	Length to fork face (includes fork thickness)	l2	mm	2485	2560	2735	2795
4.21	Overall width	b1/b2	mm	1150 / 1640	1150 / 1640	1275 / 1690	1290 / 1690
4.22	Fork dimensions (thickness, width, length)	s / e / l	mm	40 x 100 x 1070	40 x 100 x 1070	45 x 125 x 1070	45 x 125 x 1070
4.23	Fork carriage to DIN 15173 A / B / no			2A	2A	3A	3A
4.24	Fork carriage width	b3	mm	1000	1000	1000	1000
4.31	Ground clearance under mast, with load	m1	mm	115	115	135	150
4.32	Ground clearance at centre of wheelbase, with load (forks lowered)	m2	mm	135	135	165	170
4.33	Working aisle width with 1000 x 1200 mm pallets, crosswise	Ast	mm	3855	3890	4075	4135
4.34a	Working aisle width with 800 × 1200 mm pallets, crosswise	Ast	mm				
4.34b	Working aisle width with 800 x 1200 mm pallets, lengthwise	Ast	mm	3655	3690	3875	3935
4.35	Turning circle radius	Wa	mm	2200	2230	2380	2440
4.36	Minimum distance between centres of rotation	b13	mm	715	715	780	780
	PERFORMANCE						
5.1	Travel speed, with / without load		km/h	16.5 / 17.5	16.0 / 17.5	16.0/17.0	16.5 / 18.0
5.2	Lifting speed, with / without load		m/s	0.61 / 0.64	0.61 / 0.64	0.49 / 0.51	0.41 / 0.43
5.3	Lowering speed, with / without load		m/s	0.50 / 0.50	0.50 / 0.50	0.50 / 0.50	0.50 / 0.50
5.5	Rated drawbar pull, with / without load		N	16200 / 15900	16100 / 15800	15800 / 15800	14800 / 15000
5.6	Maxium drawbar pull,with / without load (5 min short duty)		N	-/-	-/-	-/-	-/-
5.7	Gradeability, with / without load		%	31 / 52	27 / 47	22 / 39	18 / 33
5.8	Maximum gradeability with / without load		%	- / -	- / -	- / -	- / -
5.9	Acceleration time (10 metres) with / without load		s	- / -	- / -	- / -	- / -
5.10	Service brakes (mechanical / hydraulic / electric / pneumatic)			Hydraulic	Hydraulic	Hydraulic	Hydraulic
	IC ENGINE						
7.1	Manufacturer / Type			D04EG	D04EG	D04EG	D04EG
7.2	Rated output to ISO 1585 (Gross output)		kW	36.0	36.0	36.0	36.0
7.3	Rated speed to DIN 70020		rpm	2250	2250	2250	2250
7.4	Number of cylinders / cubic capacity		cm^3	4 / 3331	4 / 3331	4 / 3331	4 / 3331
7.6a	Max torque		Nm	177	177	177	177
7.7a	Max torque at engine speed		rpm	1800	1800	1800	1800
	MISCELLANEOUS						
8.1	Type of drive control			Powershift 1 / 1	Powershift 1 / 1	Powershift 1 / 1	Powershift 1 / 1
10.1	Maximum operating pressure for attachments		bar	180	180	180	180
10.2	Oil flow for attachments		l/min	75	75	73	73
10.7	Noise level, value at operator's ear (EN 12053)		dB(A)	78	78	78	78
10.8	Towing coupling, type DIN 15170			Pin	Pin	Pin	Pin

GRENDIA ES

FD20 - 35N3 Series

DIESEL COUNTERBALANCE

2.0 – 3.5 tonnes



VDI - PERFORMANCE & DIMENSIONS

	CHARACTERISTICS					
1.1	Manufacturer			Mitsubishi Forklift Trucks	Mitsubishi Forklift Trucks	Mitsubishi Forklift Trucks
1.2	Manufacturer's model designation			FG15N	FG18N	FG20CN
1.3	Power source			LPG	LPG	LPG
1.4	Operator type			Seated	Seated	Seated
1.5	Load capacity	Q	kg	1500	1750	2000
1.6	Load center distance	c	mm	500	500	500
1.8	Load distance, axle to fork face	x	mm	400	400	415
1.9	Wheelbase	y	mm	1400	1400	1400
	WEIGHT					
2.1	Truck weight, without load / including battery (simple x mast, lowest lift height)		kg	2490	2690	3010
2.2	Axle loading with ma x imum load, front / rear (simple x mast, lowest lift height)		kg	3510 / 460	3870 / 540	4320 / 660
2.3	Axle loading without load, front / rear (simple x mast, lowest lift height)		kg	1040 / 1430	990 / 1670	1010 / 1970
	WHEELS, DRIVE TRAIN					
3.1	Tyres: V=solid, L=pneumatic, SE=solid pneumatic - front / rear			SE / SE	SE / SE	SE / SE
3.2	Tyre dimensions, front			6.50 - 10 - 10PR	6.50 - 10 - 10PR	6.50 - 10 / 5.00
3.3	Tyre dimensions, rear			5.00 - 8 - 8PR	5.00 - 8 - 8PR	5.00 - 8 / 3.00
3.5	Number of wheels, front / rear (x =driven)			2 x / 2	2 x / 2	2 x / 2
3.6	Track width (centre of tyres), front	b10	mm	890	890	890
3.7	Track width (centre of tyres), rear	b11	mm	900	900	900
	DIMENSIONS					
4.1	Mast tilt, forwards / backwards			6 / 10	6 / 10	6 / 10
4.2	Height with mast lowered (see tables)	h1	mm	2140	2140	2140
4.3	Free lift (see tables)	h2	mm	115	115	115
4.4	Lift height (see tables)	h3	mm	3300	3300	3300
4.5	Overall height with mast raised	h4	mm	4355	4355	4355
4.7	Height to top of overhead guard	h6	mm	2140	2140	2140
4.8	Seat height	h7	mm	930	930	930
4.12	Tow coupling height	h10	mm	290	290	290
4.19	Overall length	l1	mm	3330	3370	3425
4.20	Length to fork face (includes fork thickness)	l2	mm	2260	2300	2355
4.21	Overall width	b1/b2	mm	1065 / -	1065 / -	1065 / -
4.22	Fork dimensions (thickness, width, length)	s / e / l	mm	35 x 100 x 1070	35 x 100 x 1070	35 x 100 x 1070
4.23	Fork carriage to DIN 15173 A / B / no			2A	2A	2A
4.24	Fork carriage width	b3	mm	920	920	920
4.31	Ground clearance under mast, with load	m1	mm	110	110	110
4.32	Ground clearance at centre of wheelbase, with load (forks lowered)	m2	mm	135	135	135
4.33	Working aisle width with 1000 x 1200 mm pallets, crosswise	Ast	mm	3550	3580	3635
4.34a	Working aisle width with 800 × 1200 mm pallets, crosswise	Ast	mm			
4.34b	Working aisle width with 800 x 1200 mm pallets, lengthwise	Ast	mm	3350	3380	3435
4.35	Turning circle radius	Wa	mm	1950	1980	2020
4.36	Minimum distance between centres of rotation	b13	mm	555	555	555
	PERFORMANCE					
5.1	Travel speed, with / without load		km/h	19.0 / 19.5	19.0 / 19.5	19.0 / 19.5
5.2	Lifting speed, with / without load		m/s	0.64 / 0.65	0.64 / 0.65	0.64 / 0.65
5.3	Lowering speed, with / without load		m/s	0.52 / 0.50	0.52 / 0.50	0.52 / 0.50
5.5	Rated drawbar pull, with / without load		N	17400 / 16900	17400 / 16800	17300 / 17100
5.6	Maxium drawbar pull,with / without load (5 min short duty)		N	- / -	- / -	- / -
5.7	Gradeability, with / without load		%	49 / 93	43 / 81	37 / 70
5.8	Maximum gradeability with / without load		%	- / -	- / -	- / -
5.9	Acceleration time (10 metres) with / without load		s	- / -	- / -	- / -
5.10	Service brakes (mechanical / hydraulic / electric / pneumatic)			Hydraulic	Hydraulic	Hydraulic
	IC ENGINE					
7.1	Manufacturer / Type			GK21E	GK21E	GK21E
7.2	Rated output to ISO 1585 (Gross output)		kW	41	41	41
7.3	Rated speed to DIN 70020		rpm	2700	2700	2700
7.4	Number of cylinders / cubic capacity		cm^3	4 / 2065	4 / 2065	4 / 2065
7.6a	Max torque		Nm	151	151	151
7.7a	Max torque at engine speed		rpm	1800	1800	1800
	MISCELLANEOUS					
8.1	Type of drive control			Powershift 1 / 1	Powershift 1 / 1	Powershift 1 / 1
10.1	Maximum operating pressure for attachments		bar	180	180	180
10.2	Oil flow for attachments		l/min	60	60	60
10.7	Noise level, value at operator's ear (EN 12053)		dB(A)	79	79	79
10.8	Towing coupling, type DIN 15170			Pin	Pin	Pin

GRENDÍA ES

FG15 - 20CN Series

LPG COUNTERBALANCE

1.5 – 2.0 tonnes



VDI - PERFORMANCE & DIMENSIONS

	CHARACTERISTICS						
1.1	Manufacturer			Mitsubishi Forklift Trucks	Mitsubishi Forklift Trucks	Mitsubishi Forklift Trucks	Mitsubishi Forklift Trucks
1.2	Manufacturer's model designation			FG20N	FG25N	FG30N	FG35N
1.3	Power source			LPG	LPG	LPG	LPG
1.4	Operator type			Seated	Seated	Seated	Seated
1.5	Load capacity	Q	kg	2000	2500	3000	3500
1.6	Load center distance	c	mm	500	500	500	500
1.8	Load distance, axle to fork face	x	mm	455	460	495	495
1.9	Wheelbase	y	mm	1600	1600	1700	1700
	WEIGHT						
2.1	Truck weight, without load / including battery (simple x mast, lowest lift height)		kg	3300	3600	4240	4630
2.2	Axle loading with ma x imum load, front / rear (simple x mast, lowest lift height)		kg	4600 / 670	5390 / 680	6470 / 770	7180 / 950
2.3	Axle loading without load, front / rear (simple x mast, lowest lift height)		kg	1410 / 1860	1390 / 2180	1710 / 2530	1630 / 3000
	WHEELS, DRIVE TRAIN						
3.1	Tyres: V=solid, L=pneumatic, SE=solid pneumatic - front / rear			SE / SE	SE / SE	SE / SE	SE / SE
3.2	Tyre dimensions, front			7.00 - 12 - 12PR	7.00 - 12 - 12PR	28x9 - 15 - 12PR	250 - 15 - 12PR
3.3	Tyre dimensions, rear			6.00 - 9 - 10PR	6.00 - 9 - 10PR	6.50 - 10 - 10PR	6.50 - 10 - 10PR
3.5	Number of wheels, front / rear (x =driven)			2 x / 2	2 x / 2	2 x / 2	2 x / 2
3.6	Track width (centre of tyres), front	b10	mm	960	960	1060	1060
3.7	Track width (centre of tyres), rear	b11	mm	980	980	980	980
	DIMENSIONS						
4.1	Mast tilt, forwards / backwards			6 / 10	6 / 10	6 / 10	6 / 10
4.2	Height with mast lowered (see tables)	h1	mm	2150	2150	2170	2300
4.3	Free lift (see tables)	h2	mm	140	140	145	145
4.4	Lift height (see tables)	h3	mm	3300	3300	3300	3300
4.5	Overall height with mast raised	h4	mm	4355	4355	4355	4355
4.7	Height to top of overhead guard	h6	mm	2145	2145	2165	2175
4.8	Seat height	h7	mm	940	940	990	990
4.12	Tow coupling height	h10	mm	310	310	330	340
4.19	Overall length	l1	mm	3555	3630	3805	3865
4.20	Length to fork face (includes fork thickness)	l2	mm	2485	2560	2735	2795
4.21	Overall width	b1/b2	mm	1150 / 1640	1150 / 1640	1275 / 1690	1290 / 1690
4.22	Fork dimensions (thickness, width, length)	s / e / l	mm	40 x 100 x 1070	40 x 100 x 1070	45 x 125 x 1070	45 x 125 x 1070
4.23	Fork carriage to DIN 15173 A / B / no			2A	2A	3A	3A
4.24	Fork carriage width	b3	mm	1000	1000	1000	1000
4.31	Ground clearance under mast, with load	m1	mm	115	115	135	150
4.32	Ground clearance at centre of wheelbase, with load (forks lowered)	m2	mm	135	135	165	170
4.33	Working aisle width with 1000 x 1200 mm pallets, crosswise	Ast	mm	3855	3890	4075	4135
4.34a	Working aisle width with 800 × 1200 mm pallets, crosswise	Ast	mm				
4.34b	Working aisle width with 800 x 1200 mm pallets, lengthwise	Ast	mm	3655	3690	3875	3935
4.35	Turning circle radius	Wa	mm	2200	2230	2380	2440
4.36	Minimum distance between centres of rotation	b13	mm	715	715	780	780
	PERFORMANCE						
5.1	Travel speed, with / without load		km/h	19.0 / 19.5	19.0 / 19.5	19.0 / 19.5	16.5 / 18.0
5.2	Lifting speed, with / without load		m/s	0.59 / 0.61	0.59 / 0.61	0.52 / 0.53	0.43 / 0.44
5.3	Lowering speed, with / without load		m/s	0.50 / 0.50	0.50 / 0.50	0.53 / 0.50	0.42 / 0.40
5.5	Rated drawbar pull, with / without load		N	17100 / 16800	17100 / 16700	21800 / 21400	19900 / 19800
5.6	Maxium drawbar pull,with / without load (5 min short duty)		N	- / -	- / -	- / -	- / -
5.7	Gradeability, with / without load		%	35 / 60	30 / 53	32 / 60	26 / 48
5.8	Maximum gradeability with / without load		%	- / -	- / -	- / -	- / -
5.9	Acceleration time (10 metres) with / without load		s	- / -	- / -	- / -	- / -
5.10	Service brakes (mechanical / hydraulic / electric / pneumatic)			Hydraulic	Hydraulic	Hydraulic	Hydraulic
	IC ENGINE						
7.1	Manufacturer / Type			GK21E	GK21E	GK25E	GK25E
7.2	Rated output to ISO 1585 (Gross output)		kW	41	41	46.9	46.9
7.3	Rated speed to DIN 70020		rpm	2700	2700	2700	2700
7.4	Number of cylinders / cubic capacity		cm^3	4 / 2065	4 / 2065	4 / 2488	4 / 2488
7.6a	Max torque		Nm	151	151	188	188
7.7a	Max torque at engine speed		rpm	1800	1800	1600	1600
	MISCELLANEOUS						
8.1	Type of drive control			Powershift 1 / 1	Powershift 1 / 1	Powershift 1 / 1	Powershift 1 / 1
10.1	Maximum operating pressure for attachments		bar	180	180	180	180
10.2	Oil flow for attachments		l/min	73	73	73	73
10.7	Noise level, value at operator's ear (EN 12053)		dB(A)	79	79	79	79
10.8	Towing coupling, type DIN 15170			Pin	Pin	Pin	Pin

GRENDIA ES

FG20 - 35N Series

LPG COUNTERBALANCE

2.0 – 3.5 tonnes



MAST PERFORMANCE AND CAPACITY

GRENDIA ES

FG15-20(C)N

MAST TYPE	FG15N-18N - 20CN			FG15N		FG18N		FG20CN	
	h3 mm	h1 mm	h4 mm	h2 / h5 mm	Q@ c=500mm kg	h2 / h5 mm	Q@ c=500mm kg	h2 / h5 mm	Q@ c=500mm kg
SIMPLEX	3000	1990	4055	80 -	1500	80 -	1750	80 -	2000
	3300	2140	4355	80 -	1500	80 -	1750	80 -	2000
	3500	2240	4555	80 -	1500	80 -	1750	80 -	2000
	3700	2340	4755	80 -	1500	80 -	1750	80 -	2000
	4000	2540	5055	80 -	1500	80 -	1750	80 -	1950
	4500	2790	5555	80 -	1425	80 -	1700	80 -	1400
	5000	3050	6055	80 -	1375	80 -	1600*	-	-
	5500	3300	6555	80 -	1250*	80 -	1525*	-	-
	6000	3550	7055	80 -	1200*	80 -	1325*	-	-
DUPLEX	3000	1995	4055	- 940	1500	- 940	1750	- 940	2000
	3290	2140	4350	- 1085	1500	- 1085	1750	- 1085	2000
	3510	2260	4570	- 1205	1500	- 1205	1750	- 1205	2000
	4030	2585	5085	- 1530	1500	- 1530	1750	- 1530	2000
TRIPLEX	3700	1790	4755	- 735	1500	- 735	1750	- 735	2000
	4000	1890	5055	- 835	1475	- 835	1750	- 835	2000
	4300	1990	5355	- 935	1425	- 935	1700	- 935	1950
	4700	2140	5755	- 1085	1375	- 1085	1625*	- 1085	1900
	5000	2240	6055	- 1185	1325	- 1185	1575*	- 1185	1325
	5500	2430	6555	- 1375	1250*	- 1375	1500*	-	-
	6000	2610	7055	- 1555	1175*	- 1555	1325*	-	-
	6500	2850	7555	- 1759	950	- 1759	950*	-	-
	7000	3050	8055	- 1995	650*	- 1995	650*	-	-

Note: all models with SE tires
Note: * with dual-drive front wheels
See Mast Charts for applicable tilt angle limitations

FD/FG20-25N(3)

MAST TYPE	FG20 - 25N FD20 - 25N3			FG20N FD20N3		FG25N FD25N3	
	h3 mm	h1 mm	h4 mm	h2 / h5 mm	Q@ c=500mm kg	h2 / h5 mm	Q@ c=500mm kg
SIMPLEX	3000	1995	4055	100 -	2000	100 -	2500
	3300	2145	4345	100 -	2000	100 -	2500
	3500	2245	4555	100 -	2000	100 -	2000
	3700	2345	4755	100 -	2000	100 -	2500
	4000	2545	5055	100 -	2000	100 -	2500
	4500	2795	5555	100 -	2000	100 -	2500
	5000	3065	6055	100 -	1950	100 -	2400
	5500	3315	6555	100 -	1850*	100 -	2250*
	6000	3565	7055	100 -	1800*	100 -	2150*
DUPLEX	3000	1995	4055	- 935	2000	- 940	2500
	3300	2145	4350	- 1085	2000	- 1090	2500
	3530	2265	4585	- 1205	2000	- 1210	2500
	4020	2590	5075	- 1530	2000	- 1535	2500
TRIPLEX	3700	1795	4755	- 735	2000	735 -	2500
	4000	1895	5055	- 835	2000	835 -	2500
	4300	1995	5355	- 935	2000	935 -	2500
	4700	2145	5755	- 1085	1950	1085 -	2400
	5000	2245	6055	- 1185	1900	1185 -	2350
	5500	2415	6555	- 1355	1800	1355 -	2200*
	6000	2585	7055	- 1525	1750*	1525 -	2100*
	6500	2795	7555	- 1735	1650*	1735 -	1750*
	7000	3065	8055	- 2005	1250*	2005 -	1250*

FD/FG30-35N(3)

MAST TYPE	FG30N FD30N3					FG35N FD35N3				
	h3 mm	h1 mm	h4 mm	h2 / h5 mm	Q@ c=500mm kg	h3 mm	h1 mm	h4 mm	h2 / h5 mm	Q@ c=500mm kg
SIMPLEX	3000	2015	4055	95 -	3000	3000	2130	4055	95 -	3500
	3300	2165	4355	95 -	3000	3300	2280	4355	95 -	3500
	3500	2265	4555	95 -	3000	3500	2380	4555	95 -	3500
	3700	2365	4755	95 -	3000	3700	2480	4755	95 -	3500
	4000	2565	5055	95 -	3000	4000	2680	5055	95 -	3500
	4500	2815	5555	95 -	3000	4500	2930	5555	95 -	3500
	5000	3115	6055	95 -	2900	5000	3230	6055	95 -	3500
	5500	3365	6555	95 -	2800	5500	3480	6555	95 -	3350
	6000	3615	7055	95 -	2700	6000	3730	7055	95 -	3250
DUPLEX	3000	2045	4055	- 940	3000	3010	2180	4065	- 1125	3500
	3250	2165	4305	- 1090	3000	3300	2300	4355	- 1245	3500
	3490	2285	4545	- 1210	3000	3500	2445	4555	- 1390	3500
	4010	2610	5065	- 1535	3000	4000	2765	5055	- 1710	3500
TRIPLEX	3700	1815	4755	- 760	3000	3700	1930	4755	- 875	3500
	4000	1915	5055	- 860	3000	4000	2030	5055	- 975	3500
	4300	2015	5355	- 960	3000	4300	2130	5355	- 1075	3500
	4700	2165	5755	- 1110	3000	4700	2280	5755	- 1225	3500
	5000	2265	6055	- 1210	2900	5000	2380	6055	- 1325	3450
	5500	2435	6555	- 1380	2800	5500	2550	6555	- 1495	3300
	6000	2605	7055	- 1550	2700	6000	2720	7055	- 1665	3200
	6500	2815	7555	- 1760	2350	6500	2930	7555	- 1875	2350
	7000	3115	8055	- 2060	1600	7000	3230	8055	- 2175	1600

All dimensions include load backrest.
In case load backrest is not used h5 will increase by 390 mm (20-25N(3)), 350 mm (30N(3)), 240 mm (35N(3)), while h4 will decrease by 390 mm (20-25N(3)), 350 mm (30N(3)), 240 mm (35N(3)).
The capacities apply to pneumatic shaped solid tyres (SE).

FG15-20(C)N Models

Capacities at various load centres

Simplex - h3 = 3290 mm

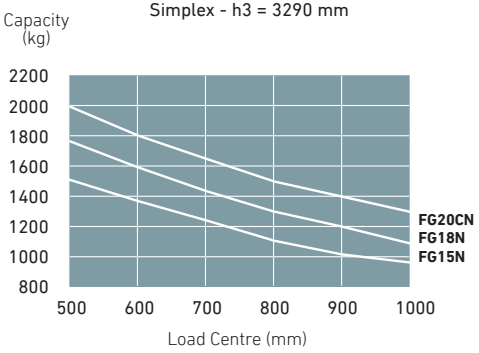

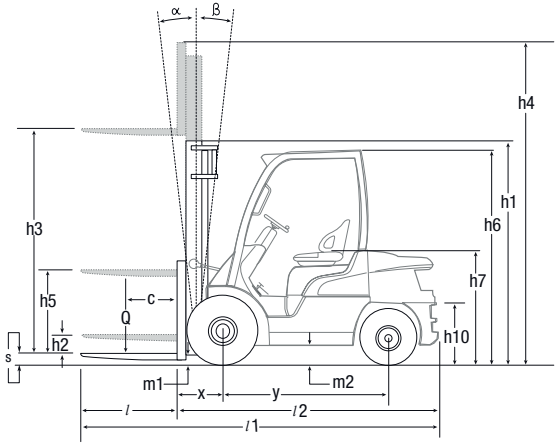

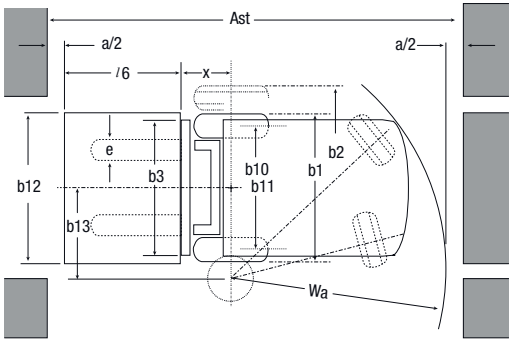

FD/FG20-35N(3) Models

Capacities at various load centres

Simplex - h3 = 3300 mm

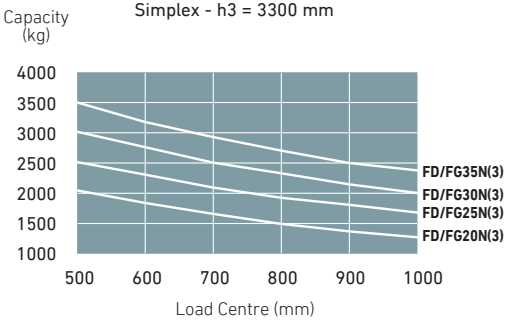

h1 Height with mast lowered
h2 Standard free lift
h3 Lift height
h4 Height with mast raised
h5 Full free lift
Q Lifting capacity, rated load
c Load centre (distance)

Ast = Wa + x + l6 +a
Ast = Working aisle width
Wa = Turning radius
a = Safety clearance = 2 x 100 mm
l6 = Pallet length
b12 = Pallet width

STANDARD EQUIPMENT & OPTIONS

● = Standard
● = Option

	FD20-25N3	FD30-35N3	FG15-18N	FG20CN	FG20-25N	FG30-35N
GENERAL	DIESEL		LPG			
Dust proof kit	●	●	●	●	●	●
Line filter for torque converter	●	●	●	●	●	●
Universal joint cover powertrain	●	●	●	●	●	●
LPG bracket removed	-	-	●	●	●	●
LPG Swing down bracket, no tank	-	-	●	●	●	●
Tilt cylinder boot kit	●	●	●	●	●	●
Lifting eyes mounted on counter weight	●	●	-	-	-	-
Belly plate (under cover)	●	●	●	●	●	●
Large capacity battery			●	●	●	●
HYDRAULIC						
3-way control valve MC	●	●	●	●	●	●
3-way control valve FC	●	●	●	●	●	●
4-way control valve MC	●	●	●	●	●	●
4-way control valve FC	●	●	●	●	●	●
MAST, FORKS AND CARRIAGE						
Loose mast	●	●	●	●	●	●
Lifting eye for mast	●	●	●	●	●	●
Heavy Load side roller (*Cannot be combined with an integral sideshifter)	●	●	●	●	●	●
Side shifter 920 mm			●	●	-	-
Side shifter 1000 mm	●	●	-	-	●	●
Integral side shifter 920 mm	-	-	●	●	-	-
Integral side shifter 1000 mm	●	●	-	-	●	●
Fork deletion	●	●	●	●	●	●
ELECTRIC						
Backup handle with horn button	●	●	●	●	●	●
Electric diesel control (Diesel)	●	●	-	-	-	-
Speed control system (LPG)	-	-	●	●	●	●
Indicator kit	●	●	●	●	●	●
LED light set	●	●	●	●	●	●
LED rear work light	●	●	●	●	●	●
Load weight indicator (for simplex & triplex masts)	●	●	●	●	●	●
Rotating beacon (orange)	●	●	●	●	●	●
Strobe light (orange)	●	●	●	●	●	●
FNR switch on adjustable armrest (*Standard on FC models)	●	●	●	●	●	●

Contact your dealer for additional standard and optional equipment.



Informative LCD display.

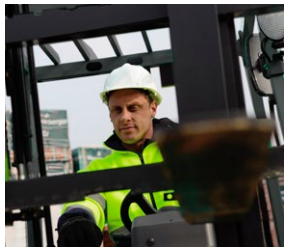

Clear-view mast



Easy service access



LED rear work light.

GRENDíA ES

FG15-35(C)N / FD20 - 35N3 Series

DIESEL AND LPG COUNTERBALANCE TRUCKS

1.5 – 3.5 tonnes

STANDARD EQUIPMENT & OPTIONS

● = Standard
○ = Option

	FD20-25N3	FD30-35N3	FG15-18N	FG20CN	FG20-25N	FG30-35N
OHG AND CABIN	DIESEL		LPG			
Grammer MSG 65 Vinyl seat	●	●	●	●	●	●
Grammer MSG 65 Cloth seat	○	○	○	○	○	○
Armrest LH side (for FC models)	●	●	●	●	●	●
Armrest LH side (for MC models)	●	●	●	●	●	●
Armrest RH side (for FC models)	-	-	-	-	-	-
Armrest RH side (for MC models)	●	●	●	●	●	●
Rear view mirrors (not available with Delux Cabin)	○	○	○	○	○	○
Convenience tray	●	●	●	●	●	●
Delux Cabin	○	○	-	-	○	○
TYRES						
Solid pneumatic tyres	●	●	●	●	●	●
Pneumatic tyres	○	○	○	-	○	○
Solid pneumatic dual drive tyres	○	○	-	-	○	○
Pneumatic dual drive tyres	○	○	○	-	○	○
ENVIRONMENT						
Single element air cleaner	●	●	-	-	-	-
Double element air cleaner	○	○	●	●	●	●
Elevated exhaust	○	○	○	○	○	○

Contact your dealer for additional standard and optional equipment.

GRENDÍA ES

FG15-35(C)N / FD20 - 35N3 Series

DIESEL AND LPG COUNTERBALANCE TRUCKS

1.5 – 3.5 tonnes



Steering directional control lever on the steering wheel (optional)



Solid pneumatic dual drive tyres



Fingertip hydraulic controls (optional)



MC levers



Delux Cabin

WHEN RELIABILITY IS EVERYTHING...



GRENDíA
THE GREEN DIAMOND

The green colour of our trucks is a sign of our commitment to protecting the environment.

The diamond shapes in our logo are a reminder that – like a diamond – a Mitsubishi forklift truck guarantees quality, reliability and a sound investment.

Like any product bearing the "MITSUBISHI" name our materials handling equipment benefits from the tremendous heritage, huge resources and cutting-edge technology of one of the world's largest corporations – Mitsubishi Heavy Industries Group.

Engineering spacecraft, jet planes, power plants and more, MHI specialises in those technologies where performance, dependability and superiority decide your success or failure...

So when we promise you quality, reliability and value for money, you know it's a guarantee we have the power to deliver.

That's why every model in our award-winning and comprehensive range of lift trucks and warehouse equipment is built to a high specification – to ensure it keeps working for you. Day after day. Year after year. Whatever the job. Whatever the conditions.

YOU'LL NEVER WORK ALONE

As your local authorised dealer, we are here to keep your trucks working – through our extensive experience, our technical excellence and our commitment to customer care.

We are your local experts, backed by efficient channels to the entire organisation of Mitsubishi Forklift Trucks.

No matter where you are, we are close by – with the capability to meet your needs.

Discover how Mitsubishi Forklift Trucks give you more from your local authorised dealer or when you visit our website www.mitforklift.com











Performance specifications may vary depending on standard manufacturing tolerances, vehicle condition, types of tyres, floor or surface conditions, applications or operating environment. Trucks may be shown with non-standard options. Specific performance requirements and locally available configurations should be discussed with your distributor of Mitsubishi forklift trucks. We follow a policy of continual product improvement. For this reason, some materials, options and specifications could change without notice.

info@mitforklift.com

CESM2018 (01/21) © 2021 MLE

Mitsubishi Logisnext Europe B.V.
Hefbrugweg 77, 1332 AM Almere
The Netherlands
Tel: +31 (0)36 5494 411

MITSUBISHI FORKLIFT BRIEFING
mft2.eu/fb

App Store
Google Play
mft2.eu/apps

YouTube
mft2.eu/youtube

mft2.eu/facebook

MITSUBISHI FORKLIFT TRUCKS