MOVE THE WORLD FORWARD MITSUBISHI HEAVY INDUSTRIES GROUP

GRENDiA EX

FD/ FG40 - 55(C)N3 Series

DIESEL AND LPG COUNTERBALANCE TRUCKS

4.0 – 5.5 tonnes

MAXIMISE YOUR PRODUCTIVITY... WITHOUT COMPROMISING ON EFFICIENCY

Built to work as hard as you do, GRENDiA EX promises reliable, class-leading performance - whatever the challenges.



SPECIFICATIONS

FD40N3	FG40N3
FD45N3	FG45N3
FD50CN3	FG50CN3
FD50N3	FG50N3
FD55N3	FG55N3

WHEN RELIABILITY IS EVERYTHING...

MITSUBISHI FORKLIFT TRUCKS

GRENDiA EX

FD/ FG40 - 55(C)N3 Series

DIESEL AND LPG COUNTERBALANCE TRUCKS

4.0 – 5.5 tonnes





Tried and tested in the toughest applications, this no-nonsense design builds on the successes of its predecessors - delivering optimal performance.

GRENDiA EX's sophisticated Euro Stage V compliant engines and long-life design keep running costs and maintenance demands low - for maximum efficiency and productivity.

Green inside and out, GRENDiA EX keeps noise and exhaust emissions to a minimum, while delivering improved overall economy.

FRAME AND BODY

- **Stylish, purposeful design** reflects this machine's power to work productively, non-stop, whatever the conditions.
- **Robust construction** provides high stability, rigidity and protection, with no exposed wires or hoses.

MAST AND FORK ASSEMBLY

- **Strong, high-visibility mast** allows handling of heavy loads in tough environments with total confidence.
- **Wide range of high-quality masts and attachments** deliver precise compatibility and an ideal configuration for each application.

DRIVE

- **Turbocharged diesel engine** delivers the power of a 5.0L engine, with the economy of a 3.4L engine, while meeting Euro Stage V standards.
- **Diesel oxidation catalysts (DOC) and diesel particulate filter (DPF)** efficiently burn soot particles while the truck is in operation - avoiding costly downtime.
- **Advanced LPG engine with three-way catalytic converter** delivers precise, controlled performance and market-leading fuel economy with very low emissions.
- **Fully floating powertrain** with two-speed forward and one-speed reverse transmission maximises gradeability and travel speed, minimises noise and vibration, and uses maintenance-free gears instead of belts to lower running costs.
- **Adjustable transmission shift** timing increases versatility, for optimum performance in a wide variety of applications.
- **Large diameter drive axle shafts** are extremely durable and require little maintenance.

STEERING SYSTEM

- **Fully hydrostatic steering system - together with compact design - ensures effortless, precise and responsive manoeuvring - even in tight spaces.**
- **Angle-sensitive steering system** provides quick turning at low speeds and precision control at higher speeds.

BRAKES

- **Powerful drum brake system** gives excellent control with little effort and is easy to maintain.
- **Electronically controlled parking brake** allows safe, effective immobilisation of the truck with minimum effort – and without restricting knee and leg movement.

HYDRAULICS

- **Powerful hydraulic system** is specifically designed to minimise noise in the operator's environment.

ELECTRICAL AND CONTROL SYSTEMS

- **Integrated Presence System 2 (IPS2)** pioneered by Mitsubishi Forklift Trucks prevents all movement of the truck and its mast if the operator is not seated.
- **Onboard diagnostics and detailed fault diagnosis** via laptop connection alerts operators and service engineers to problems, speeds up servicing and prevents damage.

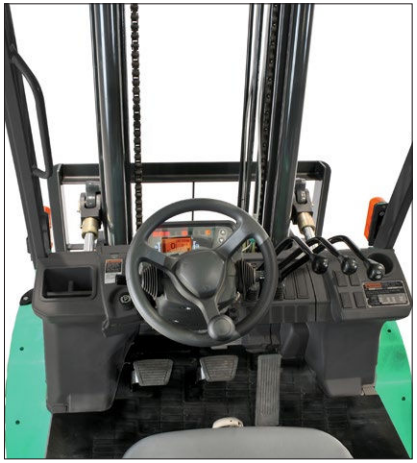



For more information on GRENDiA EX please visit our website

mft2.eu/grendiaexd

Continuing improvement may lead to changes in these specifications

GRENDiA EX

FD/ FG40 - 55(C)N3 Series

DIESEL AND LPG COUNTERBALANCE TRUCKS

4.0 – 5.5 tonnes





OPERATOR COMPARTMENT AND CONTROLS

- **Market-leading ErgoCentric design** results in easy on-off access, a unique, adjustable steering column with position memory, user-friendly controls, a practical layout and great all-round visibility – for maximum precision and productivity.
- **Fully adjustable, full-suspension Grammer seat** with hip support keeps driver comfortable through the longest of shifts.
- **Hydraulic control levers** are easy to reach and easy to use.
- **Optional fingertip hydraulic controls** with integrated, fully adjustable, high-comfort armrest (an award-winning concept) allows effortless precision.
- **Automotive-style pedals** with optimum pedal angle are easy to use and give good control without leg strain.
- **Low noise level at operator's ear** and low vibration from powertrain increases comfort and reduces fatigue.
- **LCD display** keeps operator and manager fully informed of, for example, speed, time, engine hours, soot status , service intervals and faults – to optimize productivity, truck life, safety and exhaust gass status.
- **Delux Cabin** offering outstanding visibility through laminates glass, and all-round protection from weather elements.

OTHER FEATURES

- **Long service interval** and long life of components reduces downtime and associated costs.
- **RapidAccess features** give unequalled ease of entry to all areas for checks and maintenance.
- **Optimal air filter placement** minimises replacement - saving time and money.
- **Belly Seal** protects against damaging dust and debris - preventing the 'cyclone effect' where dust and dirt is drawn into the engine and recirculated into the working environment.





FLEXCONTROL INTELLIGENT TRUCK PROTECTION:

- combined with oil-cooled wet disc brakes in an option package for high-intensity applications
- delivers dynamic performance with minimum wear of transmission components and tyres

INTEGRATED PRESENCE SYSTEM 2 (IPS2) PROVIDES:

- a hydraulic and travel interlock system that prevents all movement of the truck and its mast if the driver is not seated
- a seat belt warning light
- an automatic parking brake with alarm

For more information on GRENDiA EX please visit our website

mft2.eu/grendiaexg

VDI - PERFORMANCE & DIMENSIONS

	CHARACTERISTICS								
1.1	Manufacturer			Mitsubishi Forklift Trucks	Mitsubishi Forklift Trucks	Mitsubishi Forklift Trucks	Mitsubishi Forklift Trucks	Mitsubishi Forklift Trucks
1.2	Manufacturer's model designation			FD40N3	FD45N3	FD50CN3	FD50N3	FD55N3
1.3	Power source			Diesel	Diesel	Diesel	Diesel	Diesel
1.4	Operator type			Seated	Seated	Seated	Seated	Seated
1.5	Load capacity	Q	kg	4000	4500	5000	5000	5500
1.6	Load centre distance	c	mm	500	500	500	600	600
1.8	Load distance, axle to fork face	x	mm	577	577	582	602	602
1.9	Wheelbase	y	mm	1850	2000	2000	2150	2150
	WEIGHT							
2.1	Truck weight, without load / including battery (simple x mast, lowest lift height)		kg	5920	6330	6850	7300	7640
2.2	Axle loading with ma x imum load, front / rear (simple x mast, lowest lift height)		kg	8960 / 960	9710 / 1130	10600 / 1250	11020 / 1280	11740 / 1400
2.3	Axle loading without load, front / rear (simple x mast, lowest lift height)		kg	2630 / 3290	2780 / 3550	2900 / 3950	3220 / 4080	3170 / 4470
	WHEELS, DRIVE TRAIN							
3.1	Tyres: V=solid, L=pneumatic, SE=solid pneumatic - front / rear			L / L	L / L	L / L	L / L	SE / SE
3.2	Tyre dimensions, front			8.25 - 15 - 14PR	300 - 15 - 18PR	300 - 15 - 18PR	300 - 15 - 18PR	300 - 15 / 8.00
3.3	Tyre dimensions, rear			7.00 - 12 - 14PR	7.00 - 12 - 14PR	7.00 - 12 - 14PR	7.00 - 12 - 14PR	7.00 - 12 / 5.00
3.5	Number of wheels, front / rear (x =driven)			2 x / 2	2 x / 2	2 x / 2	2 x / 2	2 x / 2
3.6	Track width (centre of tyres), front	b10	mm	1175	1175	1175	1175	1175
3.7	Track width (centre of tyres), rear	b11	mm	1180	1180	1180	1180	1180
	DIMENSIONS							
4.1	Mast tilt, forwards / backwards			6 / 12	6 / 12	6 / 12	6 / 12	6 / 12
4.2	Height with mast lowered (see tables)	h1	mm	2320	2320	2400	2400	2400
4.3	Free lift (see tables)	h2	mm	150	150	150	160	160
4.4	Lift height (see tables)	h3	mm	3300	3300	3300	3300	3300
4.5	Overall height with mast raised	h4	mm	4430	4430	4430	4580	4580
4.7	Height to top of overhead guard	h6	mm	2295	2295	2295	2295	2295
4.8	Seat height	h7	mm	1082	1082	1082	1082	1082
4.12	Tow coupling height	h10	mm	395	395	395	395	395
4.19	Overall length	l1	mm	4220	4350	4390	4530	4580
4.20	Length to fork face (includes fork thickness)	l2	mm	3000	3130	3170	3310	3360
4.21	Overall width	b1/b2	mm	1415 / 1780	1460 / 1780	1460 / 1780	1460 / 1780	1460 / 1780
4.22	Fork dimensions (thickness, width, length)	s / e / l	mm	50 / 150 / 1220	50 / 150 / 1220	50 / 150 / 1220	60 / 150 / 1220	60 / 150 / 1220
4.23	Fork carriage to DIN 15173 A / B / no			3A	3A	3A	4A	4A
4.24	Fork carriage width	b3	mm	1190	1190	1190	1190	1190
4.31	Ground clearance under mast, with load	m1	mm	150	150	150	150	150
4.32	Ground clearance at centre of wheelbase, with load (forks lowered)	m2	mm	227	227	227	227	227
4.33	Working aisle width with 1000 x 1200 mm pallets, crosswise	Ast	mm	4357	4507	4542	4692	4742
4.34a	Working aisle width with 800 × 1200 mm pallets, crosswise	Ast	mm					
4.34b	Working aisle width with 800 x 1200 mm pallets, lengthwise	Ast	mm	4157	4307	4342	4492	4542
4.35	Turning circle radius	Wa	mm	2580	2730	2760	2890	2940
4.36	Minimum distance between centres of rotation	b13	mm	836	903	903	971	971
	PERFORMANCE							
5.1	Travel speed, with / without load		km/h	21.5 / 22.5	21.5 / 22.5	21 / 22	21 / 22	20.5 / 22
5.2	Lifting speed, with / without load		m/s	0.62 / 0.67	0.62 / 0.67	0.54 / 0.58	0.53 / 0.57	0.53 / 0.57
5.3	Lowering speed, with / without load		m/s	0.50 / 0.50	0.50 / 0.50	0.50 / 0.50	0.50 / 0.50	0.50 / 0.50
5.5	Rated drawbar pull, with / without load		N	25800 / 18200	25500 / 19300	24900 / 20000	24800 / 21900	24500 / 22100
5.6	Maxium drawbar pull,with / without load (5 min short duty)		N	- / -	- / -	- / -	- / -	- / -
5.7	Gradeability, with / without load		%	27.3 / 26.7	24.6 / 26.5	21.8 / 25.4	21 / 26.4	19.3 / 25.3
5.8	Maximum gradeability with / without load		%	- / -	- / -	- / -	- / -	- / -
5.9	Acceleration time (10 metres) with / without load		s	- / -	- / -	- / -	- / -	- / -
5.10	Service brakes (mechanical / hydraulic / electric / pneumatic)			Hydraulic	Hydraulic	Hydraulic	Hydraulic	Hydraulic
	IC ENGINE							
7.1	Manufacturer / Type			D04EG-T	D04EG-T	D04EG-T	D04EG-T	D04EG-T
7.2	Rated output to ISO 1585 (Gross output)		kW	54.0	54.0	54.0	54.0	54.0
7.3	Rated speed to DIN 70020		rpm	2250	2250	2250	2250	2250
7.4	Number of cylinders / cubic capacity		cm^3	4 / 3330	4 / 3330	4 / 3330	4 / 3330	4 / 3330
7.6a	Max torque		Nm	260	260	260	260	260
7.7a	Max torque at engine speed		rpm	1800	1800	1800	1800	1800
	MISCELLANEOUS							
8.1	Type of drive control			Powershift 2 / 1	Powershift 2 / 1	Powershift 2 / 1	Powershift 2 / 1	Powershift 2 / 1
10.1	Maximum operating pressure for attachments		bar	191	191	191	191	191
10.2	Oil flow for attachments		l/min	80	80	80	80	80
10.7	Noise level, value at operator's ear (EN 12053)		dB(A)	78.5	78.5	78.5	78.5	78.5
10.8	Towing coupling, type DIN 15170			Pin	Pin	Pin	Pin	Pin

GRENDIA EX

FD40 - 55(C)N3 Series

DIESEL COUNTERBALANCE

4.0 – 5.5 tonnes



VDI - PERFORMANCE & DIMENSIONS

	CHARACTERISTICS								
1.1	Manufacturer			Mitsubishi Forklift Trucks	Mitsubishi Forklift Trucks	Mitsubishi Forklift Trucks	Mitsubishi Forklift Trucks	Mitsubishi Forklift Trucks
1.2	Manufacturer's model designation			FG40N3	FG45N3	FG50CN3	FG50N3	FG55N3
1.3	Power source			LPG	LPG	LPG	LPG	LPG
1.4	Operator type			Seated	Seated	Seated	Seated	Seated
1.5	Load capacity	Q	kg	4000	4500	5000	5000	5500
1.6	Load centre distance	c	mm	500	500	500	600	600
1.8	Load distance, axle to fork face	x	mm	577	577	582	602	602
1.9	Wheelbase	y	mm	1850	2000	2000	2150	2150
	WEIGHT							
2.1	Truck weight, without load / including battery (simple x mast, lowest lift height)		kg	5860	6270	6780	7240	7570
2.2	Axle loading with ma x imum load, front / rear (simple x mast, lowest lift height)		kg	8940 / 920	9680 / 1090	10570 / 1210	10990 / 1250	11710 / 1360
2.3	Axle loading without load, front / rear (simple x mast, lowest lift height)		kg	2610 / 3250	2750 / 3520	2870 / 3920	3190 / 4050	3130 / 4440
	WHEELS, DRIVE TRAIN							
3.1	Tyres: V=solid, L=pneumatic, SE=solid pneumatic - front / rear			L / L	L / L	L / L	L / L	SE / SE
3.2	Tyre dimensions, front			8.25 - 15 - 14PR	300 - 15 - 18PR	300 - 15 - 18PR	300 - 15 - 18PR	300 - 15 / 8.00
3.3	Tyre dimensions, rear			7.00 - 12 - 14PR	7.00 - 12 - 14PR	7.00 - 12 - 14PR	7.00 - 12 - 14PR	7.00 - 12 / 5.00
3.5	Number of wheels, front / rear (x =driven)			2 x / 2	2 x / 2	2 x / 2	2 x / 2	2 x / 2
3.6	Track width (centre of tyres), front	b10	mm	1175	1175	1175	1175	1175
3.7	Track width (centre of tyres), rear	b11	mm	1180	1180	1180	1180	1180
	DIMENSIONS							
4.1	Mast tilt, forwards / backwards			6 / 12	6 / 12	6 / 12	6 / 12	6 / 12
4.2	Height with mast lowered (see tables)	h1	mm	2320	2320	2400	2400	2400
4.3	Free lift (see tables)	h2	mm	150	150	150	160	160
4.4	Lift height (see tables)	h3	mm	3300	3300	3300	3300	3300
4.5	Overall height with mast raised	h4	mm	4430	4430	4580	4580	4580
4.7	Height to top of overhead guard	h6	mm	2295	2295	2295	2295	2295
4.8	Seat height	h7	mm	1082	1082	1082	1082	1082
4.12	Tow coupling height	h10	mm	395	395	395	395	395
4.19	Overall length	l1	mm	4220	4350	4390	4530	4580
4.20	Length to fork face (includes fork thickness)	l2	mm	3000	3130	3170	3310	3360
4.21	Overall width	b1/b2	mm	1415 / 1780	1460 / 1780	1460 / 1780	1460 / 1780	1460 / 1780
4.22	Fork dimensions (thickness, width, length)	s / e / l	mm	50 / 150 / 1220	50 / 150 / 1220	50 / 150 / 1220	60 / 150 / 1220	60 / 150 / 1220
4.23	Fork carriage to DIN 15173 A / B / no			3A	3A	3A	4A	4A
4.24	Fork carriage width	b3	mm	1190	1190	1190	1190	1190
4.31	Ground clearance under mast, with load	m1	mm	150	150	150	150	150
4.32	Ground clearance at centre of wheelbase, with load (forks lowered)	m2	mm	227	227	227	227	227
4.33	Working aisle width with 1000 x 1200 mm pallets, crosswise	Ast	mm	4357	4507	4542	4692	4742
4.34a	Working aisle width with 800 × 1200 mm pallets, crosswise	Ast	mm					
4.34b	Working aisle width with 800 x 1200 mm pallets, lengthwise	Ast	mm	4157	4307	4342	4492	4542
4.35	Turning circle radius	Wa	mm	2580	2730	2760	2890	2940
4.36	Minimum distance between centres of rotation	b13	mm	836	903	903	971	971
	PERFORMANCE							
5.1	Travel speed, with / without load		km/h	23 / 23.5	22.5 / 23.5	22.5 / 23.5	22 / 23	22 / 23
5.2	Lifting speed, with / without load		m/s	0,67 / 0.69	0.67 / 0.69	0.58 / 0.59	0.57 / 0.59	0.53 / 0.59
5.3	Lowering speed, with / without load		m/s	0.50 / 0.50	0.50 / 0.50	0.50 / 0.50	0.50 / 0.50	0.50 / 0.50
5.5	Rated drawbar pull, with / without load		N	28700/17800	28400 / 19000	27800/19700	27700 / 21600	27500 / 21800
5.6	Maxium drawbar pull,with / without load (5 min short duty)		N	- / -	- / -	- / -	- / -	-/-
5.7	Gradeability, with / without load		%	30.8 / 26.3	27.7 / 26.3	24.6 / 25.2	23.7 / 26.2	21.8 / 25
5.8	Maximum gradeability with / without load		%	- / -	- / -	- / -	- / -	- / -
5.9	Acceleration time (10 metres) with / without load		s	- / -	- / -	- / -	- / -	- / -
5.10	Service brakes (mechanical / hydraulic / electric / pneumatic)			Hydraulic	Hydraulic	Hydraulic	Hydraulic	Hydraulic
	IC ENGINE							
7.1	Manufacturer / Type			GK45	GK45	GK45	GK45	GK45
7.2	Rated output to ISO 1585 (Gross output)		kW	54.0	54.0	54.0	54.0	54.0
7.3	Rated speed to DIN 70020		rpm	2450	2450	2450	2450	2450
7.4	Number of cylinders / cubic capacity		cm^3	6 / 4450	6 / 4450	6 / 4450	6 / 4450	6 / 4450
7.6a	Max torque		Nm	279	279	279	279	279
7.7a	Max torque at engine speed		rpm	1600	1600	1600	1600	1600
	MISCELLANEOUS							
8.1	Type of drive control			Powershift 2 / 1	Powershift 2 / 1	Powershift 2 / 1	Powershift 2 / 1	Powershift 2 / 1
10.1	Maximum operating pressure for attachments		bar	191	191	191	191	191
10.2	Oil flow for attachments		l/min	80	80	80	80	80
10.7	Noise level, value at operator's ear (EN 12053)		dB(A)	78.2	78.2	78.2	78.2	78.2
10.8	Towing coupling, type DIN 15170			Pin	Pin	Pin	Pin	Pin

GRENDIA EX

FG40 - 55(C)N3 Series

LPG COUNTERBALANCE

4.0 – 5.5 tonnes



MAST PERFORMANCE AND CAPACITY

GRENDíA EX

FD / FG40N3

MAST TYPE	h3 mm	h1 mm	h4 mm With STD backrest	h4 mm Without backrest	h2 / h5 mm With STD backrest	h2 / h5 mm Without backrest	Tilt angle (fwd - back)	FD / FG40N3 PNEUMATIC Q @ c=500mm kg	FD / FG40N3 PNEUMATIC Q @ c=600mm kg	FD / FG40N3 SOLID PNEUMATIC Q @ c=500mm kg	FD / FG40N3 SOLID PNEUMATIC Q @ c=600mm kg
SIMPLEX	3050	2170	4130	3930	150	150	6°/12°	4000	3500	4000	3500
	3350	2320	4430	4230	150	150	6°/12°	4000	3500	4000	3500
	3750	2520	4830	4630	150	150	6°/12°	4000	3500	4000	3500
	4050	2700	5130	4930	150	150	6°/12°	4000	3500	4000	3500
	4550	3000	5630	5430	150	150	6°/6°	4000	3500	4000	3500
	5050	3250	6130	5930	150	150	6°/6°	3850	3500	4000	3500
	5550	3500	6630	6430	150	150	6°/6°	3650*	3400*	3750*	3500*
	6050	3750	7130	6930	150	150	6°/6°	3500*	3300*	3600*	3400*
DUPLEX	3050	2170	4130	3950	1090	1270	6°/12°	4000	3500	4000	3500
	3350	2320	4430	4250	1240	1420	6°/12°	4000	3500	4000	3500
	3750	2520	4830	4650	1440	4620	6°/12°	4000	3500	4000	3500
	4110	2700	5190	5010	1620	1800	6°/12°	4000	3500	4000	3500
TRIPLEX	3750	1950	4830	4650	870	1050	6°/6°	4000	3500	4000	3500
	4050	2050	5130	4950	970	1150	6°/6°	4000	3500	4000	3500
	4410	2170	5490	5310	1090	1270	6°/6°	4000	3500	4000	3500
	4750	2285	5830	5650	1200	1390	6°/6°	3900	3500	4000	3500
	5100	2400	6180	6000	1320	1500	6°/6°	3800	3500	3900	3500
	5550	2550	6630	6450	1470	1650	6°/6°	3600*	3400*	3700*	3450*
	6050	2750	7130	6950	1670	1850	6°/6°	3450*	3250*	3550*	3350*
	6550	2950	7630	7450	1870	2050	6°/6°	3000*	3000*	3400*	3200*
	7050	3150	8130	7950	2070	2250	6°/6°	2400*	2400*	3300*	3100*

h1 Height with mast lowered
h2 Standard free lift
h3 Lift height
h4 Height with mast raised
h5 Full free lift
Q Lifting capacity, rated load
c Load centre (distance)

Ast = Wa + x + l6 +a
Ast = Working aisle width with load
Wa = Turning radius
a = Safety clearance = 2 x 100 mm
l6 = Pallet length
b12 = Pallet width

* Truck equipped with dual tyres. Consult your dealer for the maximum back-tilt allowed, to obtain the capacities specified.

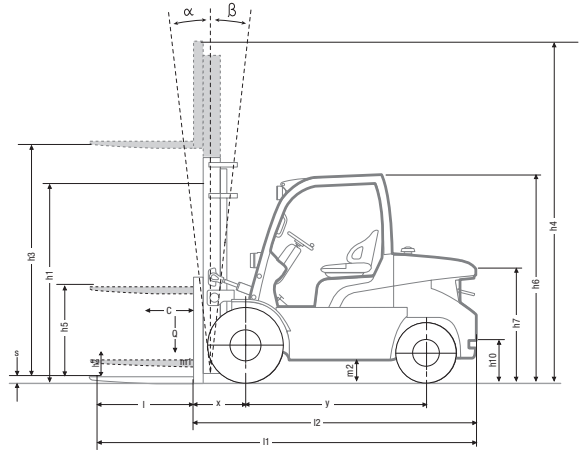

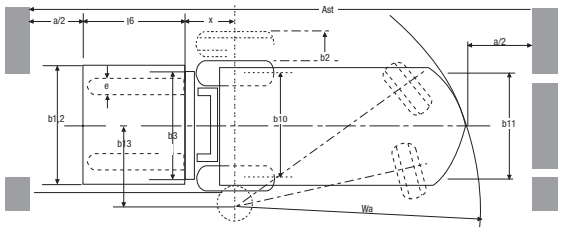

FD / FG45N3

MAST TYPE	h3 mm	h1 mm	h4 mm With STD backrest	h4 mm Without backrest	h2 / h5 mm With STD backrest	h2 / h5 mm Without backrest	Tilt angle (fwd - back)	FD / FG45N3 PNEUMATIC Q @ c=500mm kg	FD / FG45N3 PNEUMATIC Q @ c=600mm kg	FD / FG45N3 SOLID PNEUMATIC Q @ c=500mm kg	FD / FG45N3 SOLID PNEUMATIC Q @ c=600mm kg
SIMPLEX	3050	2170	4130	3930	150	150	6°/12°	4500	4000	4500	4000
	3350	2320	4430	4230	150	150	6°/12°	4500	4000	4500	4000
	3750	2520	4830	4630	150	150	6°/12°	4500	4000	4500	4000
	4050	2700	5130	4930	150	150	6°/12°	4500	4000	4500	4000
	4550	3000	5630	5430	150	150	6°/6°	4500	4000	4500	4000
	5050	3250	6130	5930	150	150	6°/6°	4500	4000	4500	4000
	5550	3500	6630	6430	150	150	6°/6°	4300*	4000*	4400*	4000*
	6050	3750	7130	6930	150	150	6°/6°	3900*	3900*	4250*	3900*
DUPLEX	3050	2170	4130	3950	1090	1270	6°/12°	4500	4000	4500	4000
	3350	2320	4430	4250	1240	1420	6°/12°	4500	4000	4500	4000
	3750	2520	4830	4650	1440	4620	6°/12°	4500	4000	4500	4000
	4110	2700	5190	5010	1620	1800	6°/12°	4500	4000	4500	4000
TRIPLEX	3750	1950	4830	4650	870	1050	6°/6°	4500	4000	4500	4000
	4050	2050	5130	4950	970	1150	6°/6°	4500	4000	4500	4000
	4410	2170	5490	5310	1090	1270	6°/6°	4500	4000	4500	4000
	4750	2285	5830	5650	1200	1390	6°/6°	4500	4000	4500	4000
	5100	2400	6180	6000	1320	1500	6°/6°	4500	4000	4500	4000
	5550	2550	6630	6450	1470	1650	6°/6°	4200*	4000*	4350*	4000*
	6050	2750	7130	6950	1670	1850	6°/6°	4050*	3800*	4200*	3900*
	6550	2950	7630	7450	1870	2050	6°/6°	3000*	3000*	4050*	3800*
	7050	3150	8130	7950	2070	2250	6°/6°	2400*	2400*	3500*	3500*

FD / FG50CN3

MAST TYPE	h3 mm	h1 mm	h4 mm With STD backrest	h4 mm Without backrest	h2 / h5 mm With STD backrest	h2 / h5 mm Without backrest	Tilt angle (fwd - back)	FD / FG50CN3 PNEUMATIC Q @ c=500mm kg	FD / FG50CN3 PNEUMATIC Q @ c=600mm kg	FD / FG50CN3 SOLID PNEUMATIC Q @ c=500mm kg	FD / FG50CN3 SOLID PNEUMATIC Q @ c=600mm kg
SIMPLEX	3060	2250	4130	3890	150	150	6°/12°	5000	4500	5000	4500
	3350	2400	4430	4190	150	150	6°/12°	5000	4500	5000	4500
	3750	2600	4830	4590	150	150	6°/12°	5000	4500	5000	4500
	4050	2850	5130	4890	150	150	6°/12°	5000	4500	5000	4500
	4550	3100	5630	5390	150	150	6°/6°	5000	4500	5000	4500
	5050	3350	6130	5890	150	150	6°/6°	5000	4500	5000	4500
	5550	3600	6630	6390	150	150	6°/6°	4750*	4500*	4850*	4500*
	6050	3850	7130	6890	150	150	6°/6°	3900*	3900*	4700*	4400*
DUPLEX	3020	2250	4100	3870	1170	1400	6°/12°	5000	4500	5000	4500
	3330	2400	4410	4180	1320	1550	6°/12°	5000	4500	5000	4500
	4130	2850	5210	4980	1770	2000	6°/12°	5000	4500	5000	4500
TRIPLEX	3750	2050	4830	4610	970	1200	6°/6°	5000	4500	5000	4500
	4090	2170	5170	4950	1090	1320	6°/6°	5000	4500	5000	4500
	4360	2260	5440	5220	1180	1410	6°/6°	5000	4500	5000	4500
	4800	2400	5880	5660	1320	1550	6°/6°	5000	4500	5000	4500
	5100	2500	6180	5960	1420	1650	6°/6°	5000	4500	5000	4500
	5550	2650	6630	5410	1570	1800	6°/6°	4700*	4450*	4850*	4500*
	6050	2850	7130	6910	1770	2000	6°/6°	4200*	4200*	4650*	4350*
	6550	3050	7630	7410	1970	2200	6°/6°	3000*	3000*	4450*	4200*
	7050	3250	8130	7910	2170	2400	6°/6°	2400*	2400*	3500*	3500*

Continuing improvement may lead to changes in these specifications

MAST PERFORMANCE AND CAPACITY

GRENDíA EX

FD / FG50N3

FD / FG50N3								FD / FG50N3 PNEUMATIC	FD / FG50N3 SOLID PNEUMATIC
MAST TYPE	h3 mm	h1 mm	h4 mm		h2 / h5 mm		Tilt angle (fwd - back)	Q @ c=600mm kg	Q @ c=600mm kg
			With STD backrest	Without backrest	With STD backrest	Without backrest			
SIMPLEX	3060	2250	4280	4030	160	160	6°/12°	5000	5000
	3360	2400	4580	4330	160	160	6°/12°	5000	5000
	3760	2600	4980	4730	160	160	6°/12°	5000	5000
	4060	2850	5280	5030	160	160	6°/12°	5000	5000
	4560	3100	5780	5530	160	160	6°/6°	5000	5000
	5060	3350	6280	6030	160	160	6°/6°	5000	5000
	5560	3600	6780	6530	160	160	6°/6°	4900*	5000
	6060	3850	7280	7030	160	160	6°/6°	4100*	4900
DUPLEX	3030	2250	4250	4000	1030	1280	6°/12°	5000	5000
	3340	2400	4560	4310	1180	1430	6°/12°	5000	5000
	4140	2850	5360	5110	1630	1880	6°/12°	5000	5000
TRIPLEX	3760	2050	4980	4740	830	1080	6°/6°	5000	5000
	4100	2170	5320	5080	950	1200	6°/6°	5000	5000
	4370	2260	5590	5350	1040	1290	6°/6°	5000	5000
	4810	2400	6030	5790	1180	1430	6°/6°	5000	5000
	5110	2500	6330	6090	1280	1530	6°/6°	5000	5000
	5560	2650	6780	6540	1430	1680	6°/6°	4900*	5000
	6060	2850	7280	7040	1630	1880	6°/6°	4300*	4800

h1 Height with mast lowered
h2 Standard free lift
h3 Lift height
h4 Height with mast raised
h5 Full free lift
Q Lifting capacity, rated load
c Load centre (distance)

Ast = Wa + x + l6 +a
Ast = Working aisle width with load
Wa = Turning radius
a = Safety clearance = 2 x 100 mm
l6 = Pallet length
b12 = Pallet width

* Truck equipped with dual tyres. Consult your dealer for the maximum back-tilt allowed, to obtain the capacities specified.

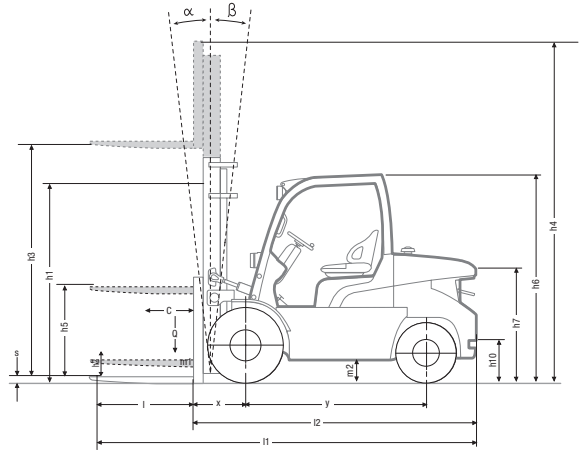

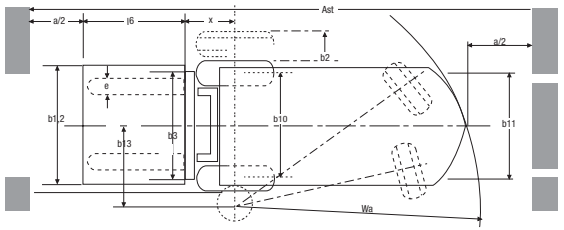

FD / FG55N3

FD / FG55N3								FD / FG55N3 PNEUMATIC	FD / FG55N3 SOLID PNEUMATIC
MAST TYPE	h3 mm	h1 mm	h4 mm		h2 / h5 mm		Tilt angle (fwd - back)	Q @ c=600mm kg	Q @ c=600mm kg
			With STD backrest	Without backrest	With STD backrest	Without backrest			
SIMPLEX	3060	2250	4280	4030	160	160	6°/12°	5500	5500
	3360	2400	4580	4330	160	160	6°/12°	5500	5500
	3760	2600	4980	4730	160	160	6°/12°	5500	5500
	4060	2850	5280	5030	160	160	6°/12°	5500	5500
	4560	3100	5780	5530	160	160	6°/6°	5500	5500
	5060	3350	6280	6030	160	160	6°/6°	5500*	5500*
	5560	3600	6780	6530	160	160	6°/6°	-	5500
	6060	3850	7280	7030	160	160	6°/6°	-	5350*
DUPLEX	3030	2250	4250	4000	1030	1280	6°/12°	5500	5500
	3340	2400	4560	4310	1180	1430	6°/12°	5500	5500
	4140	2850	5360	5110	1630	1880	6°/12°	5500	5500
TRIPLEX	3760	2050	4980	4740	830	1080	6°/6°	5500	5500
	4100	2170	5320	5080	950	1200	6°/6°	5500	5500
	4370	2260	5590	5350	1040	1290	6°/6°	5500	5500
	4810	2400	6030	5790	1180	1430	6°/6°	5450	5500
	5110	2500	6330	6090	1280	1530	6°/6°	5500*	5500
	5560	2650	6780	6540	1430	1680	6°/6°	-	5500
	6060	2850	7280	7040	1630	1880	6°/6°	-	5300*

FD/FG40-55(C)N3 Models

Capacities at various load centres

Simplex - h3 = 4000 mm

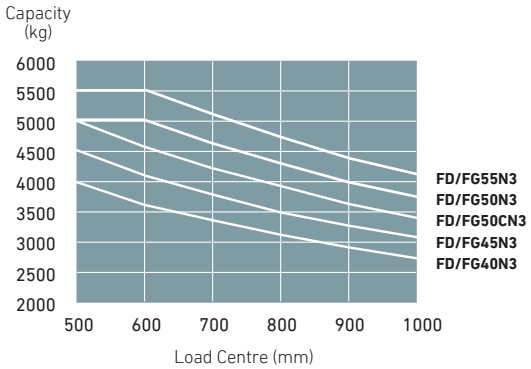

STANDARD EQUIPMENT & OPTIONS

● = Standard
● = Option

	FD40-45N3	FD50CN3	FD50N3	FD55N3	FG40-45N3	FG50CN3	FG50N3	FG55N3
GENERAL	DIESEL				LPG			
Dust proof kit	●	●	●	●	●	●	●	●
Line filter for torque converter	●	●	●	●	●	●	●	●
LPG bracket removed	-	-	-	-	●	●	●	●
Rear axle under guard	●	●	●	●	●	●	●	●
Tilt cylinder boot kit	●	●	●	●	●	●	●	●
Lifting eyes mounted on counter weight	●	●	●	●	-	-	-	-
Belly plate (under cover)	●	●	●	●	●	●	●	●
Dust proof strainer	●	●	●	●	●	●	●	●
Hydraulic oil cooler	●	●	●	●	●	●	●	●
HYDRAULIC								
3-way control valve MC	●	●	●	●	●	●	●	●
3-way control valve FC	●	●	●	●	●	●	●	●
4-way control valve MC	●	●	●	●	●	●	●	●
4-way control valve FC	●	●	●	●	●	●	●	●
MAST, FORKS AND CARRIAGE								
Loose mast	●	●	●	●	●	●	●	●
Lifting eye for mast	●	●	●	●	●	●	●	●
Uninstalled mast	●	●	●	●	●	●	●	●
Side shifter 1190 mm	●	●	●	●	●	●	●	●
Side shifter 1500 mm* (*Note: Requires Carriage 1500mm)	●	●	●	●	●	●	●	●
Integral side shifter 1190mm	●	●	●	●	●	●	●	●
Fork deletion	●	●	●	●	●	●	●	●
ELECTRIC								
Backup handle with horn button	●	●	●	●	●	●	●	●
Electric diesel control (Diesel)	●	●	●	●	-	-	-	-
Speed control system (LPG)	-	-	-	-	●	●	●	●
Indicator kit	●	●	●	●	●	●	●	●
LED light set	●	●	●	●	●	●	●	●
LED rear work light	●	●	●	●	●	●	●	●
Load weight indicator (for simplex & triplex masts)	●	●	●	●	●	●	●	●
Rotating beacon (orange)	●	●	●	●	●	●	●	●
Strobe light (orange)	●	●	●	●	●	●	●	●
FNR switch on adjustable armrest* (*Standard on FC models)	●	●	●	●	●	●	●	●

Contact your dealer for additional standard and optional equipment.

GRENDIA EX

FD / FG40-55(C)N3 Series

DIESEL AND LPG COUNTERBALANCE TRUCKS

4.0 – 5.5 tonnes



Convenient handbrake button

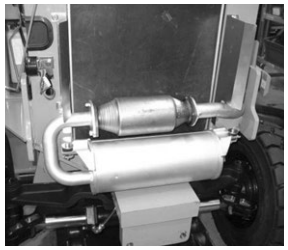

Advanced LPG technology



User-friendly hydraulic features

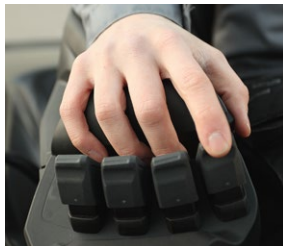

Fingertip hydraulic controls (optional)

STANDARD EQUIPMENT & OPTIONS

● = Standard
● = Option

	FD40-45N3	FD50CN3	FD50N3	FD55N3	FG40-45N3	FG50CN3	FG50N3	FG55N3
OHG AND CABIN	DIESEL				LPG			
Grammer MSG 65 Vinyl seat	●	●	●	●	●	●	●	●
Grammer MSG 65 Cloth seat	●	●	●	●	●	●	●	●
Armrest LH side (for FC models)	●	●	●	●	●	●	●	●
Armrest LH side (for MC models)	●	●	●	●	●	●	●	●
Armrest RH side (for FC models)								
Armrest RH side (for MC models)	●	●	●	●	●	●	●	●
Rear view mirrors (not available with Delux Cabin)	●	●	●	●	●	●	●	●
Convenience tray (*Only for MC models)	●	●	●	●	●	●	●	●
Delux Cabin	●	●	●	●	●	●	●	●
TYRES								
Solid pneumatic tyres	●	●	●	●	●	●	●	●
Pneumatic tyres	●	●	●		●	●	●	
Solid pneumatic dual drive tyres	●	●	●	●	●	●	●	●
Pneumatic dual drive tyres	●	●	●		●	●	●	
ENVIRONMENT								
Single element air cleaner	-	-	-	-	●	●	●	●
Double element air cleaner	●	●	●	●	●	●	●	●
Elevated exhaust	●	●	●	●	●	●	●	●

Contact your dealer for additional standard and optional equipment.

GRENDIA EX

FD / FG40-55(C)N3 Series

DIESEL AND LPG COUNTERBALANCE TRUCKS

4.0 – 5.5 tonnes



Front LED working lights



Stylish, robust design



Auto-style pedals



Delux Cabin



Pneumatic tyres

WHEN RELIABILITY IS EVERYTHING...



GRENDíA
THE GREEN DIAMOND

The green colour of our trucks is a sign of our commitment to protecting the environment.

The diamond shapes in our logo are a reminder that – like a diamond – a Mitsubishi forklift truck guarantees quality, reliability and a sound investment.

Like any product bearing the "MITSUBISHI" name our materials handling equipment benefits from the tremendous heritage, huge resources and cutting-edge technology of one of the world's largest corporations – Mitsubishi Heavy Industries Group.

Engineering spacecraft, jet planes, power plants and more, MHI specialises in those technologies where performance, dependability and superiority decide your success or failure...

So when we promise you quality, reliability and value for money, you know it's a guarantee we have the power to deliver.

That's why every model in our award-winning and comprehensive range of lift trucks and warehouse equipment is built to a high specification – to ensure it keeps working for you. Day after day. Year after year. Whatever the job. Whatever the conditions.

YOU'LL NEVER WORK ALONE

As your local authorised dealer, we are here to keep your trucks working – through our extensive experience, our technical excellence and our commitment to customer care.

We are your local experts, backed by efficient channels to the entire organisation of Mitsubishi Forklift Trucks.

No matter where you are, we are close by – with the capability to meet your needs.

Discover how Mitsubishi Forklift Trucks give you more from your local authorised dealer or when you visit our website www.mitforklift.com











Performance specifications may vary depending on standard manufacturing tolerances, vehicle condition, types of tyres, floor or surface conditions, applications or operating environment. Trucks may be shown with non-standard options. Specific performance requirements and locally available configurations should be discussed with your distributor of Mitsubishi forklift trucks. We follow a policy of continual product improvement. For this reason, some materials, options and specifications could change without notice.

info@mitforklift.com

CESM2019 (07/20) © 2020 MLE

Mitsubishi Logisnext Europe B.V.
Hefbrugweg 77, 1332 AM Almere
The Netherlands
Tel: +31 (0)36 5494 411

MITSUBISHI FORKLIFT BRIEFING
mft2.eu/fb

App Store
Google Play
mft2.eu/apps

YouTube
mft2.eu/youtube

mft2.eu/facebook

MITSUBISHI FORKLIFT TRUCKS