MOVE THE WORLD FORWARD MITSUBISHI HEAVY INDUSTRIES GROUP

TREXIA ES

FD60-100N3 Series

DIESEL COUNTERBALANCE

6 – 10 tonnes

CLASS-LEADING PERFORMANCE... WITHOUT COMPROMISE

Built for even the most challenging environments, TREXiA ES is a heavy-duty diesel counterbalance that deals with tough situations with the reliability you expect from Mitsubishi Forklift Trucks.



SPECIFICATIONS

FD60N3
FD70N3
FD80N3
FD100N3

WHEN RELIABILITY IS EVERYTHING...

MITSUBISHI FORKLIFT TRUCKS

TREXiA ES
FD60-100N3 Series
DIESEL COUNTERBALANCE

6 – 10 tonnes





Best-in-class travel speeds of 27km/h are possible thanks to a 3.8L four-cylinder common rail turbo diesel engine fully compliant with Stage V Euro emissions regulations. It delivers up to 81kW (110HP) of power for high productivity, low noise and low fuel consumption.

TREXiA ES has market-leading views of the load and forktips, with exceptional all-round visibility thanks to a clearview mast and low counterweight design. These all help operators to work easier and safer.

Despite its size, the range is precise and agile and offers operators effortless performance and comfortable ergonomic controls, reducing fatigue throughout long shifts.

DRIVE

- **Class-leading four-cylinder common rail turbo diesel stage V engine**
  Exceptionally high power at all times, even in hard-wearing applications.

FRAME AND BODY

- **Robust design**
  Reinforced to minimise stress points during heavy lifting.
- **Low counterweight design**
  Rear visibility is optimal.
- **Class-leading forward visibility**
  Exceptionally safe thanks to a view that is 20% wider than competitors.

MAST AND FORKS

- **Robust seven-roller mast construction**
  Built to easily deal with the stresses of wide loads.
- **Heavy duty clear-view mast**
  Market leading visibility of load and fork tips. Reduces damage and contributes to faster cycle times.

ELECTRICAL AND CONTROL SYSTEMS

- **Automatic transmission control**
  Effortless electronic control lever offers easy and reliable travel.
- **Electric shift lever**
  Changing direction of travel is easy, making load handling smooth.
- **Integrated Presence System**
  Hydraulic and interlock system, parking brake alarm, seatbelt and warning light all make the truck safer to operate.

HYDRAULICS

- **Quick access**
  Routine fluid checks are easy.

OPERATOR COMPARTMENT AND CONTROLS

- **Spacious and comfortable operator compartment**
  Suitable for a wide range of operator sizes, the ergonomic layout helps to reduce fatigue throughout long shifts, increasing productivity.
- **Glove box and pen holder**
  Convenient storage for tools.
- **ErgoCentric adjustable armrest**
  Allows a natural hand position, with easy one-hand adjustment, minimising injury and fatigue.
- **Optional fingertip hydraulic controls**
  With integrated, fully adjustable, high comfort armrest (an award-winning concept) allows effortless precision.

OTHER FEATURES

- **RapidAccess features**
  These allow quick and easy entry to all areas for checks and maintenance.
- **Low-noise design**
  Among the lowest in it's class (just 85dBA) for maximum operator comfort.





For more information on TREXiA ES please visit our website

mft2.eu/trexia

VDI - PERFORMANCE & DIMENSIONS

	CHARACTERISTICS						
1.1	Manufacturer			Mitsubishi Forklift Trucks	Mitsubishi Forklift Trucks	Mitsubishi Forklift Trucks	Mitsubishi Forklift Trucks
1.2	Manufacturer's model designation			FD60N3	FD70N3	FD80N3	FD100N3
1.3	Power source			Diesel	Diesel	Diesel	Diesel
1.4	Operator type			Seated	Seated	Seated	Seated
1.5	Load capacity	Q	kg	6000	7000	8000	10000
1.6	Load center distance	c	mm	600	600	600	600
1.8	Load wheel axle to fork face (forks lowered)	x	mm	615	625	720	715
1.9	Wheelbase	y	mm	2300	2300	2500	2800
	WEIGHT						
2.1	Truck weight without load, with maximum battery weight		kg	8670	9540	11510	12910
2.2	Axle loadings with nominal load & maximum battery weight, drive/load side		kg	13030/1640	14640/1900	17360/2150	20660/2250
2.3	Axle loadings without load & with maximum battery weight, drive/load side		kg	3860/4810	3910/5630	5140/6370	5980/6930
	WHEELS, DRIVE TRAIN						
3.1	Tyres: PT=Power Thane, Vul=Vulkollan, P=Polyurethane, N=Nylon, R=Rubber drive/load side			L/L	L/L	L/L	L/L
3.2	Tyre dimensions, drive side			8.25X15-14PR	8.25X15-14PR	9.00X20-14PR	9.00X20-14PR
3.3	Tyre dimensions, load side			8.25X15-14PR	8.25X15-14PR	9.00X20-14PR	9.00X20-14PR
3.5	Number of wheels, load/drive side (x=driven)			4x / 2	4x / 2	4x / 2	4x / 2
3.6	Track width (center of tyres), drive side	b10	mm	1470	1470	1600	1600
3.7	Track width (center of tyres), load side	b11	mm	1700	1700	1700	1700
	DIMENSIONS						
4.1	Fork tilt, forwards / backwards	α/β	°	6/12	6/12	6/12	6/12
4.2a	Height with mast lowered	h1	mm	2500	2500	2800	2850
4.3	Free lift	h2	mm	205	215	205	205
4.4	Lift height	h3	mm	3000	3000	3000	3000
4.5	Height with mast extended	h4	mm	4420	4420	4420	4330
4.7	Height to top of overhead guard	h6	mm	2550	2550	2660	2660
4.8	Seat- or stand height	h7	mm	1470	1470	1570	1570
4.12	Tow coupling height	h10	mm	520	520	600	590
4.19	Overall length	l1	mm	4805	4875	5245	5485
4.20	Length to fork face	l2	mm	3585	3655	4025	4265
4.21	Overall width	b1/b2	mm	2005 / -	2005 / -	2175 / -	2245 / -
4.22	Fork dimensions (thickness, width, length)	s / e / l	mm	60x150x1220	70x150x1220	75x180x1220	75x180x1220
4.23	Fork carriage to DIN			4A	4A	4A	-/-
4.24	Fork carriage width	b3	mm	1845	1845	2015	2208
4.31	Ground clearance under mast, with load	m1	mm	200	200	240	240
4.32	Ground clearance at center of wheelbase, (forks lowered)	m2	mm	225	225	290	290
4.33a	Working aisle width (Ast) with 1000 x 1200 mm pallets, load crosswise	Ast	mm	5215	5285	5630	5865
4.34a	Working aisle width (Ast) with 800 x 1200 mm pallets, load lengthwise	Ast	mm	5015	5085	5430	5665
4.35	Turning circle radius	Wa	mm	3400	3460	3710	3950
4.36	Minimum distance between centers of rotation	b13	mm	1255	1255	1290	1475
	PERFORMANCE						
5.1	Travel speed, with/without load		km/h	25.0 / 28.0	25.0 / 28.0	24.0 / 28.0	24.0 / 27.0
5.2	Lifting speed, with/without load		m/s	0.53 / 0.55	0.53 / 0.55	0.44 / 0.46	0.35 / 0.37
5.3	Lowering speed, with/without load		m/s	0.45 / 0.50	0.45 / 0.50	0.45 / 0.45	0.45 / 0.35
5.5	Rated drawbar pull, with / without load		N	54900 / 21600	54900 / 21600	59800 / 27500	63700 / 31400
5.6	Maxium drawbar pull,with / without load (5 min short duty)		N	-/-	-/-	-/-	-/-
5.7	Gradeability, with/without load		%	28 / 20	28 / 20	25 / 20	21 / 20
5.8	Maximum gradeability, with/without load		%	-/-	-/-	-/-	-/-
5.9	Acceleration time (10 metres) with/without load		s	-/-	-/-	-/-	-/-
5.10	Service brakes (mechanical / hydraulic / electric / pneumatic)			Hydraulic	Hydraulic	Hydraulic	Hydraulic
	IC ENGINE						
7.1	Manufacturer / Type			Kubota V3800	Kubota V3800	Kubota V3800	Kubota V3800
7.2	Rated / Nominal output to ISO 1585		kW	81.0	81.0	81.0	81.0
7.3	Rated speed to DIN 70 020		rpm	2400	2400	2400	2400
7.4	Number of cylinders / cubic capacity		cm^3	4 / 3769	4 / 3769	4 / 3769	4 / 3769
7.6a	Max torque		Nm	385	385	385	385
7.7a	Max torque at engine speed		rpm	1500	1500	1500	1500
	MISCELLANEOUS						
8.1	Type of drive control			Powershift 2/2	Powershift 2/2	Powershift 2/2	Powershift 2/2
10.1	Maximum operating pressure for attachments		bar	206	206	206	206
10.2	Oil flow for attachments		l/min	-/-	-/-	-/-	-/-
10.7	Level of noise at the ear level of the driver according to EN 12 053:2001 and EN ISO 4871 in work LpAZ		dB(A)	86	86	86	86
10.8	Towing coupling design / DIN type, ref.			Pin	Pin	Pin	Pin

TREXIA ES

DIESEL COUNTERBALANCE

FD60-100N3 Series

6 - 10 tonnes

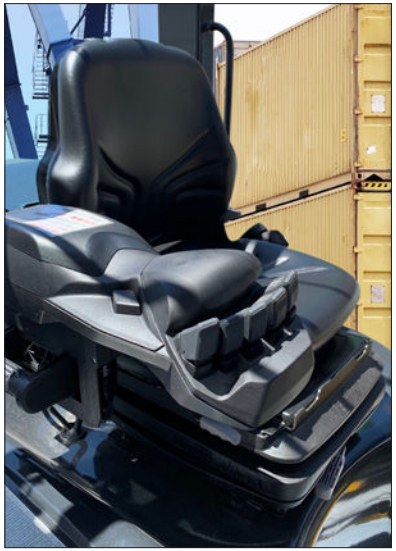

Spacious and comfortable operator compartment



Integrated, fully adjustable armrest

Continuing improvement may lead to changes in these specifications

MAST PERFORMANCE AND CAPACITY

TREXIA ES

FD60-100N3 Series

FD60N3

MAST TYPE	h3 mm	h1 mm	h4 mm		h2/h5 mm		tilt angle fwd /back	Q @ c = 600kg
			With STD	Without backrest	With STD	Without backrest		
SIMPLEX	3000	2500	4420	3950	205	205	6°/12°	6000
	3300	2650	4720	4259	205	205	6°/12°	6000
	3500	2750	4920	4450	205	205	6°/12°	6000
	4000	3050	5420	4975	205	205	6°/12°	6000
	4500	3300	5920	5475	205	205	6°/12°	6000
	5000	3550	6420	5975	205	205	6°/6°	6000
	5500	3850	6920	6525	205	205	3°/6°	5700
	6000	4100	7420	7025	205	205	3°/6°	5400
DUPLEX	3000	2625	4420	4095	1580	1255	6°/12°	6000
	3300	2775	4720	4395	1730	1405	6°/12°	6000
	3500	2875	4920	4595	1830	1505	6°/12°	6000
	4000	3175	5420	5095	2130	1805	6°/12°	6000
	4500	3425	5920	5595	2380	2055	6°/12°	6000
TRIPLEX	4000	2500	5400	5075	1455	1130	6°/10°	5800
	4350	2625	5750	5425	1580	1255	6°/10°	5800
	4800	2775	6200	5875	1730	1405	6°/10°	5800
	5000	2875	6400	6075	1830	1505	6°/10°	5700
	5500	3130	6900	6575	2085	1760	3°/6°	5500
	6000	3300	7400	7075	2255	1930	3°/6°	5000
	7000	3675	8400	8075	2630	2305	3°/6°	4000
	8000	4100	9400	9075	3055	2730	3°/6°	2500

FD70N3

MAST TYPE	h3 mm	h1 mm	h4 mm		h2/h5 mm		tilt angle fwd /back	Q @ c = 600kg
			With STD	Without backrest	With STD	Without backrest		
SIMPLEX	3000	2500	4420	4105	215	215	6°/12°	7000
	3300	2650	4720	4405	215	215	6°/12°	7000
	3500	2750	4920	4605	215	215	6°/12°	7000
	4000	3050	5420	5105	215	215	6°/12°	7000
	4500	3300	5920	5605	215	215	6°/12°	7000
	5000	3550	6420	6105	215	215	6°/6°	7000
	5500	3850	6920	6605	215	215	3°/6°	6600
	6000	4100	7420	7105	215	215	3°/6°	6400
DUPLEX	3000	2625	4420	4095	1590	1265	6°/12°	7000
	3300	2775	4720	4395	1740	1415	6°/12°	7000
	3500	2875	4920	4595	1840	1515	6°/12°	7000
	4000	3175	5420	5095	2140	1815	6°/12°	7000
	4500	3425	5920	5595	2390	2065	6°/12°	7000
TRIPLEX	4000	2500	5400	5075	1465	1140	6°/10°	6800
	4350	2625	5750	5425	1590	1265	6°/10°	6800
	4800	2775	6200	5875	1740	1415	6°/10°	6800
	5000	2875	6400	6075	1840	1515	6°/10°	6700
	5500	3130	6900	6575	2095	1770	3°/6°	6500
	6000	3300	7400	7075	2265	1940	3°/6°	6000
	7000	3675	8400	8075	2640	2315	3°/6°	4500
	8000	4100	9400	9075	3035	2740	3°/6°	2700

FD80N3

MAST TYPE	h3 mm	h1 mm	h4 mm		h2/h5 mm		tilt angle fwd /back	Q @ c = 600kg
			With STD	Without backrest	With STD	Without backrest		
SIMPLEX	3000	2800	4420	4230	205	205	6°/12°	8000
	3300	2950	4720	4445	205	205	6°/12°	8000
	3500	3050	4920	4645	205	205	6°/12°	8000
	4000	3350	5420	5145	205	205	6°/12°	8000
	4500	3600	5920	5645	205	205	6°/12°	8000
	5000	3850	6420	6145	205	205	6°/6°	7750
	5500	4150	6920	6645	205	205	3°/6°	7400
	6000	4400	7420	7145	205	205	3°/6°	7000
DUPLEX	3000	2700	4420	4210	1580	1345	6°/12°	8000
	3300	2850	4720	4510	1730	1495	6°/12°	8000
	3500	2950	4920	4710	1830	1595	6°/12°	8000
	4000	3250	5420	5210	2130	1895	6°/12°	8000
	4500	3500	5920	5710	2380	2145	6°/12°	8000
TRIPLEX	4000	2575	5400	5165	1455	1220	6°/10°	7700
	4350	2700	5750	5515	1580	1345	6°/10°	7700
	4800	2850	6200	5965	1730	1495	6°/10°	7700
	5000	2950	6400	6165	1830	1595	6°/10°	7600
	5500	3205	6900	6665	2085	1850	3°/6°	7300
	6000	3375	7400	7165	2255	2020	3°/6°	6700
	7000	3750	8400	8165	2630	2395	3°/6°	5400
	8000	4175	9400	9165	3055	2820	3°/6°	3500

FD100N3

MAST TYPE	h3 mm	h1 mm	h4 mm		h2/h5 mm		tilt angle fwd /back	Q @ c = 600kg
			With STD	Without backrest	With STD	Without backrest		
SIMPLEX	3000	2850	-	4330	-	205	6°/12°	10000
	3300	3000	-	4630	-	205	6°/12°	10000
	3500	3100	-	4830	-	205	6°/12°	10000
	4000	3400	-	5330	-	205	6°/12°	10000
	4500	3650	-	5830	-	205	6°/12°	10000
	5000	3900	-	6330	-	205	6°/6°	10000
	5500	4200	-	6830	-	205	3°/6°	9000
	6000	4450	-	7330	-	205	3°/6°	8000

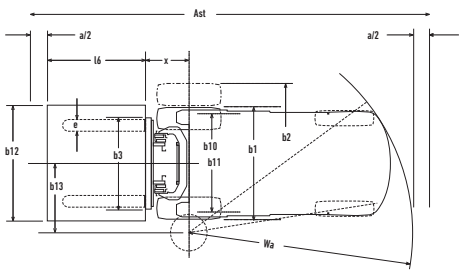

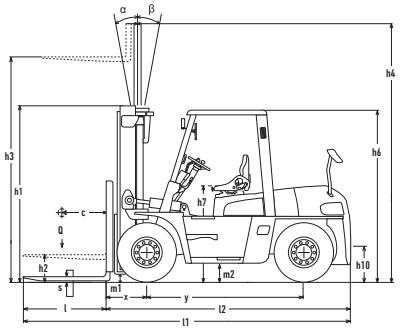

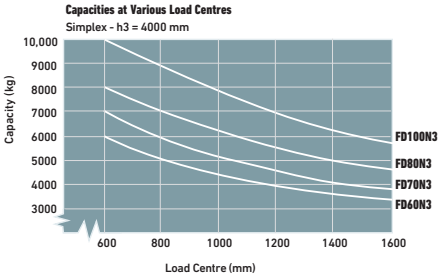

Ast = Working aisle width with load
Ast = Wa + R + a
Wa = Turning radius
a = Safety clearance = 2 x 100 mm
l6 = Pallet length (1200 mm)
x = Load wheel axle to fork face
b12 = Pallet width (800 or 1000 mm)
Q = Lifting capacity, rated load
c = Load centre (distance)

h1 = Height with mast lowered
h2 = Standard free lift
h3 = Lift height
h4 = Raised mast height
h5 = Full free lift

STANDARD EQUIPMENT & OPTIONS

● = Standard
● = Option

	FD60N3	FD70N3	FD80N3	FD100N3
GENERAL				
Default canvas roof	●	●	●	●
Headguard deletion	●	●	●	●
2 Rear view mirrors (OHG mounted)	●	●	●	●
Rear view mirror center mounted	●	●	●	●
Large size rear view mirror	●	●	●	●
Heater drivers area	●	●	●	●
Tilt Cylinder Boots	●	●	●	●
Tilt Cylinder cover	●	●	●	●
Power steering Boots	●	●	●	●
Fingertip lever hydraulic control	●	●	●	●
HYDRAULIC CONTROL				
2-way control valve MC	●	●	●	●
3-way control valve MC	●	●	●	●
4-way control valve MC	●	●	●	●
5-way control valve MC	●	●	●	●
3-way control valve FC	●	●	●	●
4-way control valve FC	●	●	●	●
5-way control valve FC	●	●	●	●
MAST, FORKS AND CARRIAGE				
Loose mast	●	●	●	●
Carriage wide –Simplex	●	●	●	●
Carriage extra wide –Simplex	●	●	●	●
Integral sideshifter for shaft type forks – Simplex	●	●	●	●
Integral sideshifter for hook type forks – Triplex	●	●	●	●
ELECTRIC				
Load weight indicator (Cannot be combined with ARMDC)	●	●	●	●
Mast tilt gauge	●	●	●	●
OK monitor (checks battery fluid-, Air cleaner dust- and Coolant status)	●	●	●	●
High volume back-up buzzer	●	●	●	●
Torque converter temperature gauge	●	●	●	●
Wide range rear working lights	●	●	●	●
Wide range of Strobe light	●	●	●	●
Wide range front working lights	●	●	●	●
Rear LED red line warning light (activated by reverse lever)	●	●	●	●
Backup handle with horn button	●	●	●	●
TYRES				
Pneumatic Dual tire-drive- / Single tire-steer-	●	●	●	●
Solid Pneumatic Dual tire-drive- / Single tire-steer-	●	●	●	●
Solid Pneumatic Dual tire –drive-/ Single tire-steer- (Soft comp.)	●	●		
Solid Pneumatic Dual tire –drive-/ Single tire-steer- (White)	●	●	●	●
AIR INTAKE & EXHAUST				
Air intake pre-cleaner	●	●	●	●
Exhaust cover	●	●	●	●
CCV heater	●	●	●	●

TREXIA ES

DIESEL COUNTERBALANCE

FD60-100N3 Series

6 - 10 tonnes



Ergonomic operator compartment.



Large, clear multifunctional display.

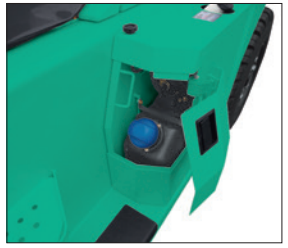

Easy access maintenance points.

WHEN RELIABILITY IS EVERYTHING...



Like any product bearing the "MITSUBISHI" name our materials handling equipment benefits from the tremendous heritage, huge resources and cutting-edge technology of one of the world's largest corporations – Mitsubishi Heavy Industries Group.

Engineering spacecraft, jet planes, power plants and more, MHI specialises in those technologies where performance, dependability and superiority decide your success or failure...

So when we promise you quality, reliability and value for money, you know it's a guarantee we have the power to deliver.

That's why every model in our award-winning and comprehensive range of lift trucks and warehouse equipment is built to a high specification – to ensure it keeps working for you. Day after day. Year after year. Whatever the job. Whatever the conditions.

YOU'LL NEVER WORK ALONE

As your local authorised dealer, we are here to keep your trucks working – through our extensive experience, our technical excellence and our commitment to customer care.

We are your local experts, backed by efficient channels to the entire organisation of Mitsubishi Forklift Trucks.

No matter where you are, we are close by – with the capability to meet your needs.

Discover how Mitsubishi Forklift Trucks give you more from your local authorised dealer or when you visit our website www.mitforklift.com











TREXiA ES

POWER. PERFORMANCE. PRECISION.

Even when operations are at their most demanding, TREXiA never misses a beat. Class-leading ergonomics, exceptional visibility and remarkable agility mean this titan is more than mere muscle.

Because heavy-duty work needs heavy-duty performance.

Performance specifications may vary depending on standard manufacturing tolerances, vehicle condition, types of tyres, floor or surface conditions, applications or operating environment. Trucks may be shown with non-standard options. Specific performance requirements and locally available configurations should be discussed with your distributor of Mitsubishi forklift trucks. We follow a policy of continual product improvement. For this reason, some materials, options and specifications could change without notice.

info@mitforklift.com

CESM2156 (09/21) © 2021 MLE

Mitsubishi Logisnext Europe B.V.
Hefbrugweg 77, 1332 AM Almere
The Netherlands
Tel: +31 (0)36 5494 411

MITSUBISHI FORKLIFT BRIEFING
mft2.eu/fb

App Store
Google Play
mft2.eu/apps

YouTube
mft2.eu/youtube

mft2.eu/facebook

MITSUBISHI FORKLIFT TRUCKS