MOVE THE WORLD FORWARD MITSUBISHI HEAVY INDUSTRIES GROUP

EDiA EX

FB25-35A(C)N Series

ELECTRIC COUNTERBALANCE

2.5 – 3.5 tonnes

CONTROL DRIVES CONFIDENCE... CONFIDENCE DRIVES WORK

Everything about EDiA EX inspires confidence. Our design team worked to build something that's robust yet nimble, technologically advanced yet completely intuitive to control. EDiA gives you confidence to do the job knowing it'll always be up to the task, every time. With four-wheel steering and impressive residual capacities you get big-truck performance that works in tight spaces.
And AutoBoost means you'll never feel like you're lacking power.

SPECIFICATIONS

FB25AN
FB25ACN
FB30AN
FB30ACN
FB35AN



WHEN
RELIABILI TY IS
EVER YTHING...

MITSUBISHI FORKLIFT TRUCKS

EDiA EX

FB25-35A(C)N Series

ELECTRIC COUNTERBALANCE

2.5 – 3.5 tonnes





But it's not just about performance, it's about safety too. From the mast to the dashboard to the counterweight, every part has been refined to maximise the driver's all-round view of the task. No gimmicks, just great design. Smart systems work with the driver's capabilities and the current load to adjust the response to the current situation - for example, lifting and lowering is always smooth and steady thanks to the Adaptive Lift Control system.

For years our forklifts have been the operator's favourite. With a choice of intuitive control schemes options, different operator modes, a highly adjustable cabin, and countless other features, each operator can have the EDiA EX they want, with a setup that feels completely natural to them the second they sit in the cab. A perfectly tailored setup makes a shift more comfortable, more efficient, and more productive. It's all about inspiring confidence.

BRAKES

- **Sealed, wet-disc brakes**
  Truck uses regenerative braking in normal driving, so mechanical brakes have a long life span and are virtually maintenance-free.
- **Automatic parking brake with hill hold**
  The truck stops automatically when the accelerator is not engaged, preventing rolling on ramps. No need to remember to use a handle or switch.
- **Intelligent Cornering System**
  The truck senses the angle of a turn and reduces speed early for maximum stability and accurate, positive cornering.

DRIVE

- **Sensitive Drive System (SDS)**
  An intuitive driver-assist system for increased safety. Performance is managed according to steer angle and the velocity of foot and finger controls.
- **ECO mode**
  This mode optimises energy efficiency and gives smoother performance. Ideal for long shifts, training, new users, and part-time users.
- **PRO mode**
  This mode maximises performance parameters, giving full control to more experienced operators in intensive situations.
- **AutoBoost***
  Acceleration and torque boost functions provide more power when needed, such as on ramps.
- **Electric differential lock***
  When activated, both front wheels spin simultaneously, giving the truck better traction and control in slippery conditions.

ELECTRICAL AND CONTROL SYSTEMS

- **Straightforward component layout**
  Fast, easy access to key areas, reducing downtime and cutting routine servicing bills.
- **Sealed connectors**
  This reduces the need for maintenance and repair.
- **Sideways battery change**
  Integrated sliding rollers offer quick and easy battery change for multi-shift operations. (Option)
- **Emergency switch**
  Weather-protected emergency switch stops the truck.

FORKS AND MAST

- **Passive Sway Control**
  Minimises mast sway, especially in high lifts above 3m.
- **Adaptive Lift Control***
  Allows truck to remain stable with fewer movements when lowering loads from high heights.
- **Adjustable lifting and lowering setting**
  Through the multi-functional configuration software TruckTool, the lifting and lowering functions can be adjusted.
- **Strong, high-visibility mast**
  Free-lift cylinder structure is optimised with hoses over chains for outstanding visibility.





For more information on EDiA EX please visit our website

mft2.eu/ediaex

* AutoBoost, electric differential lock, and ALC are all in-house designed 'patent pending' features.

Continuing improvement may lead to changes in these specifications

EDiA EX
FB25-35A(C)N Series
ELECTRIC COUNTERBALANCE

2.5 – 3.5 tonnes





OPERATOR COMPARTMENT AND CONTROLS

- **Unparalleled 360° visibility**
  An optimised mast, wheel, dashboard and counterweight design maximises visibility to load, forks, front and rear wheels - giving safe, confident operation in tight spaces.
- **F2 button**
  This simple thumb control integrates additional key controls without taking your eyes off the load. Options include clamp release and automatic tilt centring.
- **Optimised pedal position**
  All pedals are in the most ergonomic position, shaped and angled so each pedal will feel familiar to use and easy on the ankles.
- **Clear, informative display**
  Full colour and easy to read from all angles. even in direct sunlight. Perfectly positioned for at-a-glance reference, without reducing all-round visibility.
- **Touch-sensitive fingertip controls**
  Controls have a natural-feeling, spring-loaded response: press gently for finer control.
- **ErgoCentric adjustable armrest**
  This allows for a natural hand position, minimising injury and fatigue. Can be easily adjusted with one hand.
- **Fully adjustable driving position**
  Create the perfect seat, arm and steering wheel position for each operator's unique needs.
- **Plenty of storage space**
  Storage for on-board essentials, putting clipboard, mobile phone, drinks bottle and pen all easily to hand.
- **Spacious, open cabin**
  The room means that operators of various sizes can benefit from a range of comfortable driving positions.
- **Extra-large low step**
  Entry and exit is easy and safe, thanks to a high-grip surface.
- **Dashboard bar**
  Easy to attach options such as monitors without blocking main display.
- **Narrow inclined dashboard**
  This enhances the driver's perception of surroundings - giving even greater visibility to the front and sides of the truck.
- **Four independently gliding windows**
  Rear windows can glide to the front, this helps with situations such as accessing door controls while reversing.
- **Rear window**
  Can be opened partially for ventilation or fully for emergency exit.
- **Low windshield wiper motor**
  Operator has a good view from the middle of the mast.
- **Long handle bar**
  Aids safer entry/exit.
- **Flat floor**
  No obstructions and plenty of room for the operator.
- **Dual joysticks**
  Dual joysticks offer simultaneous functions for lift and tilt, and settings can be customised to customer requirements. (Option)





For more information on EDiA EX please visit our website

mft2.eu/ediaex

EDiA EX

FB25-35A(C)N Series

ELECTRIC COUNTERBALANCE

2.5 – 3.5 tonnes





HYDRAULICS

- **Precision tilt and side shift**
  This provides easy, fine control - making difficult movements safer and faster.
- **Load sensing hydraulic system**
  Load handling functions react similarly to different load weights.
- **Automatically optimised hydraulic control for higher lifts**
  Minimises jerky movements for smoother, safer operation.

FRAME AND BODY

- **Bright working lights**
  Illuminate load and surroundings. Installed in mast structure, but do not light the structure or cabin to minimise reflections and increase visibility.
- **Easy charging latch**
  Small latch on the side of the truck allows charging cable to be connected without opening the battery door. (Li-ion option only)

STEERING SYSTEM

- **Four Wheel Steering (4WS)**
  Front axle drive motors turn in separate directions for better grip and precise handling. The rear axle steers through a full 100°, with dual drive motors for instant, smooth turning on the spot and no initial "push". This offers excellent manoeuvrability in tight spaces.
- **Perfectly weighted steering**
  Optimal steering wheel size with a light but firm feel gives confidence and manoeuvrability at all speeds.





For more information on EDiA EX please visit our website

mft2.eu/ediaex

4WS FOUR WHEEL STEERING · SDS SENSITIVE DRIVE SYSTEM · PSC PASSIVE SWAY CONTROL · ALC ADAPTIVE LIFT CONTROL · AHH AUTOMATIC HILL HOLD · AutoBoost · ICS INTELLIGENT CORNERING SYSTEM

EDiA EX

OPTIONAL LI-ION BATTERY SYSTEMS

MAKE YOUR FORKLIFT GO EVEN FURTHER





Tried, tested and proven in the field, lead-acid batteries have been the long-standing top choice for companies employing electric lift trucks. However, with long charging times, demanding maintenance requirements, the need for extra batteries and high risk of operator misuse, it can be a challenge. Fortunately, there's a new battery system on the block: Li-ion from Mitsubishi Forklift Trucks.

Designed to meet your business' demands - including multi-shift (24/7) operations - without the need for spare batteries, our high-performance Li-ion battery system is up to 30% more efficient than lead-acid counterparts. Plus, it's virtually error-proof, thanks to its ultra-low-maintenance design.

- **Gas-emission free and space efficient operation**
  with no need for air ventilation and/or closed charging room.
- **Exceptional high battery & charger efficiency**
  due to state-of-the-art technology, delivers up to 30% more power efficiency than lead-acid batteries.
- **Maintenance free design**
  Eliminates the need for daily checks and water re-fills by operator, and reduces the risk of operators damaging cells.
- **No spare batteries and charging room required**
  saves space and costs in multi-shift application to maximise profitability.
- **Quick charge capabilities**
  mean that just 15 minutes is all your battery needs to keep your truck going a few more hours. (It only takes from 1 hour to fully charge a completely discharged battery.)
- **Higher sustained voltage**
  ensures more consistent lifting and driving performance, which is particularly noticeable towards the end of a shift.
- **Active protection componentry**
  continuously monitors the system, highlighting potential issues, including misuse.
- **High safety features include**
  circuit protection, deep-discharge and overcharge protection, individual cell temperature and voltage monitoring.
- **On-the-go performance and monitoring**
  is possible thanks to the system's integrated monitoring system with easy-to-read display unit.
- **Wide choice of battery and charger capacities**
  so the most suitable power supply can be matched to the exact requirements of a specific application.





Fully integrated Li-ion battery

Features a sophisticated CANbus communication and an automatic ON/OFF synchronization between battery and truck. Battery level, notifications and alarms are integrated into the truck display, to secure clear and easy overview for the truck operator.

For more information on Li-ion please visit our website

mft2.eu/lion

VDI - PERFORMANCE & DIMENSIONS

	CHARACTERISTICS			Mitsubishi Forklift Trucks	Mitsubishi Forklift Trucks	Mitsubishi Forklift Trucks	Mitsubishi Forklift Trucks	Mitsubishi Forklift Trucks
1.1	Manufacturer (abbreviation)			FB25AN	FB25ACN	FB30AN	FB30ACN	FB35AN
1.2	Manufacturer's model designation			Electric	Electric	Electric	Electric	Electric
1.3	Power source: (battery, diesel, LP gas, petrol)			Seated	Seated	Seated	Seated	Seated
1.4	Operator type: pedestrian, (operator)-standing, -seated							
1.5	Load capacity	Q	kg	2500	2500	3000	3000	3500
1.6	Load center distance	c	mm	500	500	500	500	500
1.8	Load distance, axle to fork face	x	mm	476	476	504	504	504
1.9	Wheelbase	y	mm	1730	1585	1730	1585	1730
	WEIGHT							
2.1	Truck weight, without load / including battery (simplex mast, lowest lift height)		kg	4737	4584	5230	5222	5654
2.2	Axle loading with maximum load, front / rear (simplex mast, lowest lift height)		kg	6301 / 937	6296 / 788	7348 / 882	7351 / 870	8183 / 971
2.3	Axle loading without load, front / rear (simplex mast, lowest lift height)		kg	2390 / 2347	2256 / 2328	2607 / 2623	2450 / 2771	2651 / 3002
	WHEELS, DRIVE TRAIN							
3.1	Tyres: V=solid, L=pneumatic, SE=solid pneumatic - front / rear			SE	SE	SE	SE	SE
3.2	Tyre dimensions, front			23 × 9 - 10	23 × 9 - 10	23 × 10 - 12	23 × 10 - 12	23 × 10 - 12
3.3	Tyre dimensions, rear			18 × 7 - 8	18 × 7 - 8	18 × 7 - 8	18 × 7 - 8	18 × 7 - 8
3.5	Number of wheels, front / rear (x=driven)			2 x / 2	2 x / 2	2 x / 2	2 x / 2	2 x / 2
3.6	Truck width (center of tyres), front	b10	mm	985	985	950	950	950
3.7	Truck width (center of tyres), rear	b11	mm	970	970	970	970	970
	DIMENSIONS							
4.1	Mast tilt, forwards / backwards	α/β	°	6 / 8	6 / 8	6 / 8	6 / 8	6 / 8
4.2	Height with mast lowered (see tables)	h1	mm	2145	2145	2165	2165	2291
4.3	Free lift (see tables)	h2	mm	100	100	100	100	100
4.4	Lift height (see tables)	h3	mm	3300	3300	3270	3270	3300
4.5	Overall height with mast raised	h4	mm	4355	4355	4325	4325	4345
4.7	Height to top of overhead guard	h6	mm	2240	2240	2240	2240	2240
4.8	Seat height	h7	mm	1130	1130	1130	1130	1130
4.12	Tow coupling height	h10	mm	395	395	395	395	395
4.19	Overall length	l1	mm	3600	3459	3628	3487	3628
4.20	Length to fork face (includes fork thickness)	l2	mm	2530	2389	2558	2417	2558
4.21	Overall width	b1/b2	mm	1190	1190	1190	1190	1190
4.22	Fork dimensions (thickness, width, length)	s / e / l	mm	40 × 100 × 1100	40 × 100 × 1100	45 × 120 × 1100	45 × 120 × 1100	45 × 120 × 1100
4.23	Fork carriage to DIN 15 173 A/B/no			2A	2A	3A	3A	3A
4.24	Fork carriage width	b3	mm	1000	1000	1000	1000	1000
4.31	Ground clearance under mast, with load	m1	mm	105	105	115	115	115
4.32	Ground clearance at center of wheelbase, with load (forks lowered)	m2	mm	122	122	122	122	122
4.33	Working aisle width with 1000 x 1200 mm pallets, crosswise	Ast	mm	3805	3660	3830	3690	3830
4.34a	Working aisle width with 800 x 1200 mm pallets, crosswise	Ast	mm	3749	3605	3773	3629	3773
4.34b	Working aisle width with 800 x 1200 mm pallets, lengthwise	Ast	mm	3960	3815	3985	3840	3985
4.35	Turning circle radius	Wa	mm	2064	1920	2064	1920	2064
4.36	Minimum distance between centers of rotation	b13	mm	160	160	160	160	160
	PERFORMANCE							
5.1	Travel speed, with / without load		km/h	20 / 20	20 / 20	20 / 20	20 / 20	18 / 18
5.2	Lifting speed, with / without load		m/s	0.5 / 0.65	0.5 / 0.65	0.45 / 0.6	0.45 / 0.6	0.45 / 0.6
5.3	Lowering speed, with / without load		m/s	0.55 / 0.5	0.55 / 0.5	0.5 / 0.45	0.5 / 0.45	0.5 / 0.45
5.5	Rated drawbar pull, with / without load		N	9300 / 9700	9300 / 9700	9100 / 9550	9100 / 9550	8950 / 9500
5.6	Maximum drawbar pull, with / without load (5 min short duty)		N	15800 / 16200	15800 / 16200	15550 / 16050	15550 / 16050	15400 / 16000
5.7	Gradeability, with / without load		%	15 / 25	15 / 25	13 / 22	13 / 22	12 / 20
5.8	Maximum gradeability, with / without load		%	23 / 38	23 / 38	20 / 34	20 / 33	18 / 31
5.9	Acceleration time (10 metres) with / without load		s	4.1 / 3.8	4.1 / 3.8	4.2 / 3.8	4.2 / 3.8	4.4 / 3.8
5.10	Service brakes (mechanical / hydraulic / electric / pneumatic)			Hydraulic	Hydraulic	Hydraulic	Hydraulic	Hydraulic
	ELECTRIC MOTORS							
6.1	Drive motor capacity (60 min. short duty)		kW	2 × 8	2 × 8	2 × 8	2 × 8	2 × 8
6.2	Lift motor output at 15% duty factor		kW	20.8	20.8	25.5	25.5	25.5
6.3	Battery to DIN 43 531 / 35 / 36 A/B/C/no			43536A	43536A	43536A	43536A	43536A
6.4	Battery voltage/capacity at 5-hour discharge		V/Ah	80 / 700-775	80 / 560-620	80 / 700-775	80 / 560-620	80 / 700-775
6.5	Battery weight		kg	1863	1558	1863	1558	1863
	MISCELLANEOUS							
8.1	Type of drive control			AC	AC	AC	AC	AC
10.1	Maximum operating pressure for attachments			185	185	185	185	205
10.2	Oil flow for attachments		bar	30	30	30	30	30
10.7	Noise level, value at operator's ear (EN 12053)		l/min	65	65	66	66	66
10.8	Towing coupling design / DIN type, ref.		dB(A)	DIN 15170-H	DIN 15170-H	DIN 15170-H	DIN 15170-H	DIN 15170-H

EDiA EX

FB25-35A(C)N Series

ELECTRIC COUNTERBALANCE

2.5 - 3.5 tonnes



FB35AN

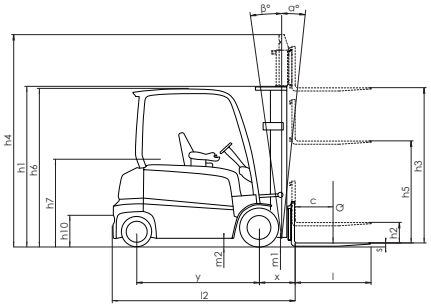

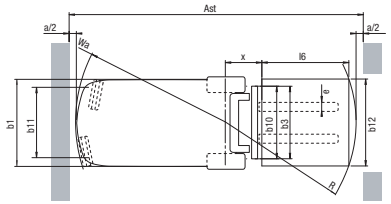

Ast = Wa + R + a
Ast = Working aisle width wtih load
Wa = Turning radius
a = Safety clearance = 2 x 100 mm
R = $\sqrt{(l6 + x)^2 + (b12 / 2 - b13)^2}$
b12 = Pallet width (1200 mm)

Continuing improvement may lead to changes in these specifications

MAST PERFORMANCE AND CAPACITY

EDiA EX

FB25-35(C)N Series

FB25AN / FB25ACN						FB25ACN		FB25AN	
MAST TYPE	h3 mm	h1 mm	h4 mm	h2 / h5** mm	tilt angle (fwd-rev)°	Q@ c=500 mm kg	Q@ c=600 mm kg	Q@ c=500 mm kg	Q@ c=600 mm kg
SIMPLEX	3000	1995*	4055	100	6 - 8	2500	2250	2500	2250
	3300	2145*	4355	100	6 - 8	2500	2250	2500	2250
	3740	2410	4795	100	6 - 8	2500	2250	2500	2250
	4100	2590	5155	100	6 - 8	2500	2250	2500	2250
	4500	2800	5555	100	6 - 8	2500	2250	2500	2250
	5000	3050	6055	100	6 - 8	2475	2250	2500	2250
	5500	3300	6555	100	6 - 4	2400	2225	2450	2250
	6000	3550	7055	100	6 - 4	2000	2000	2000	2000
DUPLEX	3000	1995*	4055	940	6 - 8	2500	2250	2500	2250
	3300	2145*	4355	1090	6 - 8	2500	2250	2500	2250
	3700	2410	4755	1355	6 - 8	2500	2250	2500	2250
	4020	2590	5075	1535	6 - 8	2500	2250	2500	2250
TRIPLEX	3730	1805*	4785	750	6 - 6	2500	2250	2500	2250
	4030	1905*	5085	850	6 - 6	2500	2250	2500	2250
	4300	1995*	5355	940	6 - 6	2500	2250	2500	2250
	4750	2145*	5805	1090	6 - 6	2500	2250	2500	2250
	5060	2265	6115	1210	6 - 6	2450	2250	2500	2250
	5500	2410	6555	1355	6 - 6	2350	2200	2500	2250
	5990	2590	7045	1535	6 - 4	2275	2075	2375	2225
	6500	2850	7555	1795	6 - 4	2075	2025	1925	1925
	7000	3050	8055	1995	6 - 4	1575	1575	1475	1475

* Lower than overhead guard. ** Without load back rest free lift height is increased by 395 mm.

FB30AN / FB30ACN						FB30ACN		FB30AN	
MAST TYPE	h3 mm	h1 mm	h4 mm	h2 / h5** mm	tilt angle (fwd-rev)°	Q@ c=500 mm kg	Q@ c=600 mm kg	Q@ c=500 mm kg	Q@ c=600 mm kg
SIMPLEX	3030	2045*	4085	100	6 - 8	3000	2700	3000	2700
	3270	2165*	4325	100	6 - 8	3000	2700	3000	2700
	3700	2430	4755	100	6 - 8	3000	2700	3000	2700
	4000	2610	5055	100	6 - 8	3000	2700	3000	2700
	4500	2870	5555	100	6 - 8	3000	2700	3000	2700
	5000	3120	6055	100	6 - 8	2900	2700	3000	2700
	5500	3370	6555	100	6 - 4	2800	2600	2925	2700
	6000	3635	7055	100	6 - 4	2675	2475	2625	2575
DUPLEX	3000	2035*	4055	980	6 - 8	3000	2700	3000	2700
	3250	2165*	4305	1110	6 - 8	3000	2700	3000	2700
	3700	2430	4755	1375	6 - 8	3000	2700	3000	2700
	4010	2610	5065	1555	6 - 8	3000	2700	3000	2700
TRIPLEX	3690	1825*	4745	770	6 - 6	3000	2700	3000	2700
	3990	1925*	5045	870	6 - 6	3000	2700	3000	2700
	4320	2045*	5375	990	6 - 6	3000	2700	3000	2700
	4700	2165*	5755	1110	6 - 6	2950	2700	3000	2700
	5060	2285	6115	1230	6 - 6	2875	2650	3000	2700
	5450	2430	6505	1375	6 - 6	2800	2600	2900	2700
	5970	2610	7025	1555	6 - 4	2625	2475	2725	2575
	6470	2870	7525	1815	6 - 4	1975	1975	2075	2075
	7000	3070	8055	2015	6 - 4	1425	1425	1575	1575

* Lower than overhead guard. ** Without load back rest free lift height is increased by 350 mm.

SE tires, standard lifting carriage, 1000 - 1400 mm forks

h1 = Height with mast lowered
h2 = Standard free lift
h3 = Lift height
h4 = Height with mast raised
h5 = Full free lift
Q = Lifting capacity, rated load
c = Load centre (distance)

FB35AN						FB35AN	
MAST TYPE	h3 mm	h1 mm	h4 mm	h2 / h5** mm	tilt angle (fwd-rev)°	Q@ c=500 mm kg	Q@ c=600 mm kg
SIMPLEX	3000	2170*	4045	100	6 - 8	3500	3150
	3300	2290	4345	100	6 - 8	3500	3150
	3720	2500	4765	100	6 - 8	3500	3150
	4000	2755	5045	100	6 - 8	3500	3150
	4500	3000	5545	100	6 - 8	3500	3150
	5000	3250	6045	100	6 - 8	3500	3150
	5500	3500	6545	100	6 - 4	3400	3150
	6000	3750	7045	100	6 - 4	2775	2775
DUPLEX	3010	2170*	4055	1125	6 - 8	3500	3150
	3300	2290	4345	1245	6 - 8	3500	3150
	3720	2615	4765	1570	6 - 8	3500	3150
	4000	2755	5045	1710	6 - 8	3500	3150
TRIPLEX	3730	1930*	4775	885	6 - 6	3500	3150
	4010	2050*	5055	1005	6 - 6	3500	3150
	4390	2170*	5435	1125	6 - 6	3500	3150
	4700	2290	5745	1245	6 - 6	3500	3150
	5030	2435	6075	1390	6 - 6	3450	3150
	5580	2615	6625	1570	6 - 6	3175	3075
	5990	2755	7045	1710	6 - 4	2875	2875
	6510	2930	7555	1885	6 - 4	2225	2225
	7000	3125	8045	2080	6 - 4	1675	1675

* Lower than overhead guard.
** Without load back rest free lift height is increased by 240 mm.

BATTERY DIMENSIONS		FB25AN	FB25ACN	FB30AN	FB30ACN	FB35AN
Battery voltage	V	80	80	80	80	80
Capacity at a 5-hour discharge	Ah	700-775	560-620	700-775	560-620	700-775
Battery weight, (+/-5%)	kg	1863	1558	1863	1558	1863
BATTERY BOX DIMENSIONS						
Length	mm	1028	1028	1028	1028	1028
Width	mm	855	711	855	711	855
Height	mm	784	784	784	784	784
BATTERY COMPARTMENT SIZE						
Length	mm	1056	1056	1056	1056	1056
Width	mm	865	720	865	720	865
Height	mm	790	790	790	790	790

* 5mm tolerance

Capacities at various load centres

Simplex - h3 = 3300 mm

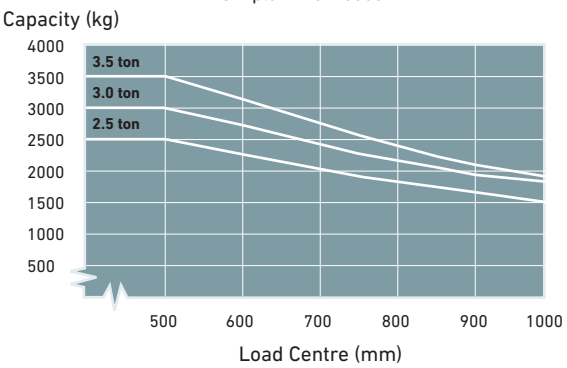

STANDARD EQUIPMENT & OPTIONS

● = Standard
● = Option

	FB25N	FB25CN	FB30N	FB30CN	FB35N
GENERAL					
4-wheel chassis, 80 volts, front wheel dual drive	●	●	●	●	●
Forks with a length of 1,070mm, equipped with load backrest	●	●	●	●	●
3-valve hydraulic fingertip control mounted on an ergonomic armrest	●	●	●	●	●
Key pre-set economy or high performance mode (ECO / PRO)	●	●	●	●	●
Battery compartment side door	●	●	●	●	●
Multifunctional interactive full colour display	●	●	●	●	●
Intelligent Cornering System	●	●	●	●	●
Tiltable steering column	●	●	●	●	●
TruckTool setup and diagnostics	●	●	●	●	●
PDS (Seat Switch Timeout = all functions are disabled, the truck will go into the stop mode, automatically applied parking brake)	●	●	●	●	●
Full-suspension vinyl Grammer MSG65 seat	●	●	●	●	●
CE name plates -language markings	●	●	●	●	●
Operations and Maintenance Manual	●	●	●	●	●
DIN battery connectors on frame	●	●	●	●	●
Battery door detection sensor	●	●	●	●	●
Fingertip control armrest	●	●	●	●	●
Manual control levers	●	●	●	●	●
Dual Joystick	●	●	●	●	●
POWER SOURCE					
Integrated Li-ion battery*	●	●	●	●	●
Lead acid battery	●	●	●	●	●
FRAME					
Battery sideway exchange chassis	●	●	●	●	●
Roller bed, chassis integrated (for battery SWE)	●	●	●	●	●
Battery tray (for roller guided battery SWE)	●	●	●	●	●
Battery sideway exchange tool**	●	●	●	●	●
Li-ion battery easy charging	●	●	●	●	●
T-bar battery stand	●	●	●	●	●
LIGHTING					
LED work lights (2 at the front and 1 at the rear)	●	●	●	●	●
Automated reversing light	●	●	●	●	●
Auto light switch	●	●	●	●	●
Amber strobe	●	●	●	●	●
Amber strobe mounted low	●	●	●	●	●
"Blue point" rear light	●	●	●	●	●
"Blue point" rear light mounted low	●	●	●	●	●
ELECTRICAL SYSTEM					
Smart backup alarm	●	●	●	●	●
Current output	●	●	●	●	●
12V connector	●	●	●	●	●
Operator presence pedal	●	●	●	●	●
Electronic differential lock	●	●	●	●	●
Dual pedal layout	●	●	●	●	●
Drive direction selection switch on ergonomic armrest (Forward-Backward). Only on FC controls	●	●	●	●	●
Drive direction lever in steering column (Forward-Neutral-Reverse)	●	●	●	●	●
Road light kit	●	●	●	●	●
PIN code access with start switch	●	●	●	●	●
Automated lift controls	●	●	●	●	●
Automatic tilt centering via the F2 button with FC TILT/C	●	●	●	●	●
Load weight indicator	●	●	●	●	●

* Li-ion battery option is available in selected regions.
** Backwards compatible with the EDiA family

Continuing improvement may lead to changes in these specifications

EDiA EX

FB25-35(C)N Series

ELECTRIC COUNTERBALANCE

2.5 – 3.5 tonnes

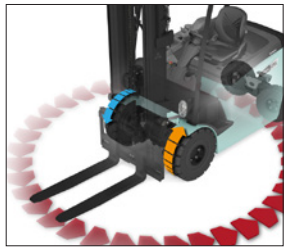

Front wheel dual drive



Battery sideway exchange chassis



Delux cabin

STANDARD EQUIPMENT & OPTIONS

● = Standard
● = Option

	FB25N	FB25CN	FB30N	FB30CN	FB35N
OPERATOR'S CABIN					
Grammer MSG65 seat	●	●	●	●	●
Grammer MSG65 with heater	●	●	●	●	●
Grammer MSG65 with cloth upholstery	●	●	●	●	●
Grammer MSG65 with cloth upholstery and heater	●	●	●	●	●
Grammer MSG75	●	●	●	●	●
Grammer MSG75 with heater	●	●	●	●	●
Grammer MSG75 with cloth upholstery	●	●	●	●	●
Grammer MSG75 with cloth upholstery and heater	●	●	●	●	●
Backrest extension	●	●	●	●	●
ACCESSORIES					
Rear view mirror	●	●	●	●	●
External rear view mirror	●	●	●	●	●
Dead angle mirror	●	●	●	●	●
Wide view mirror	●	●	●	●	●
A4 size paper holder	●	●	●	●	●
Accessory clamp	●	●	●	●	●
Fire extinguisher	●	●	●	●	●
CABIN					
Steel doors, available in combination with options REAR and FR+TP	●	●	●	●	●
PVC doors, available in combination with options REAR and FR+TP	●	●	●	●	●
Sun visor, available in combination with option FR+TP	●	●	●	●	●
Interior package, available in combination with REAR and door	●	●	●	●	●
Heater, available in combination with REAR and steel doors, 2000 W	●	●	●	●	●
Safety doors	●	●	●	●	●
Container design. This option is available only with sideway battery exchange option SWE.	●	●	●	●	●
Delux cabin	●	●	●	●	●
EXTERIOR					
Special colour (RAL) for the frame and counterweight	●	●	●	●	●
FORKS & CARRIAGE					
Various fork lengths (920 - 1970mm), widths (100/120mm) and thicknesses (40/45mm), fork deletion	●	●	●	●	●
Side shifter W1000mm	●	●	●	●	●
Integrated side shifter W1000mm	●	●	●	●	●
Fork positioner+ integrated side shifter	●	●	●	●	●
Load backrest	●	●	●	●	●
HYDRAULIC SYSTEM					
3/4/5-way valve armrest-mounted fingertip control	●	●	●	●	●
3/4-way valve manual control	●	●	●	●	●
Adaptive Lift Control	●	●	●	●	●
Double action FC 3 v, for clamp usage	●	●	●	●	●
Double action FC 4 v, for clamp usage	●	●	●	●	●
Double action MC 3 v, for clamp usage	●	●	●	●	●
Double action MC 4 v, for clamp usage	●	●	●	●	●
Hydraulic accumulator	●	●	●	●	●
Adjustable hydraulic pressure (for 3rd and 4th valve)	●	●	●	●	●
Food grade hydraulic oil	●	●	●	●	●
Biodegradable hydraulic oil	●	●	●	●	●
Cold area hydraulic oil VG15	●	●	●	●	●
Hot area hydraulic oil VG46	●	●	●	●	●
3-way piping	●	●	●	●	●
4-way piping	●	●	●	●	●
TYRES					
Solid Pneumatic Tyres	●	●	●	●	●
Pneumatic Tyres	●	●	-	-	-
Non-marking Solid Tyres	●	●	-	-	-
Non-marking Cushion tyres	●	●	●	●	●
Cushion tyres	●	●	●	●	●
Solid Pneumatic Twin Tyres	●	●	●	●	●
Wide Stance drive wheels	●	●	●	●	●

EDiA EX

FB25-35(C)N Series

ELECTRIC COUNTERBALANCE

2.5 – 3.5 tonnes



Fingertip control armrest



Manual control levers

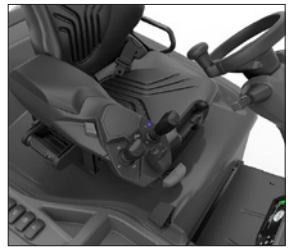

Dual Joystick

WHEN RELIABILITY IS EVERYTHING...



EDiA
THE ELECTRIC DIAMOND

The family name EDiA appears proudly on our award-winning range of electric forklift trucks.

The reputation that Mitsubishi Forklift Trucks enjoys for endurance and reliability has likened them to the quality and enduring value of a diamond.

Like any product bearing the "MITSUBISHI" name our materials handling equipment benefits from the tremendous heritage, huge resources and cutting-edge technology of one of the world's largest corporations – Mitsubishi Heavy Industries Group.

Engineering spacecraft, jet planes, power plants and more, MHI specialises in those technologies where performance, dependability and superiority decide your success or failure...

So when we promise you quality, reliability and value for money, you know it's a guarantee we have the power to deliver.

That's why every model in our award-winning and comprehensive range of lift trucks and warehouse equipment is built to a high specification – to ensure it keeps working for you. Day after day. Year after year. Whatever the job. Whatever the conditions.

YOU'LL NEVER WORK ALONE

As your local authorised dealer, we are here to keep your trucks working – through our extensive experience, our technical excellence and our commitment to customer care.

We are your local experts, backed by efficient channels to the entire organisation of Mitsubishi Forklift Trucks.

No matter where you are, we are close by – with the capability to meet your needs.

Discover how Mitsubishi Forklift Trucks give you more from your local authorised dealer or when you visit our website www.mitforklift.com











Performance specifications may vary depending on standard manufacturing tolerances, vehicle condition, types of tyres, floor or surface conditions, applications or operating environment. Trucks may be shown with non-standard options. Specific performance requirements and locally available configurations should be discussed with your distributor of Mitsubishi forklift trucks. We follow a policy of continual product improvement. For this reason, some materials, options and specifications could change without notice.

info@mitforklift.com

CESM2151 (10/21) © 2021 MLE

Mitsubishi Logisnext Europe B.V.
Hefbrugweg 77, 1332 AM Almere
The Netherlands
Tel: +31 (0)36 5494 411

MITSUBISHI FORKLIFT BRIEFING
mft2.eu/fb

App Store
Google Play
mft2.eu/apps

YouTube
mft2.eu/youtube

mft2.eu/facebook

MITSUBISHI FORKLIFT TRUCKS