MOVE THE WORLD FORWARD MITSUBISHI HEAVY INDUSTRIES GROUP

EDiA XL

FB40-55(C)N(H) Series

ELECTRIC COUNTERBALANCE

4.0 – 5.5 tonnes

QUIET AND STEADY FOR COMPLETE COMFORT AND CONTROL

The EDiA XL benefits from revolutionary features designed to give operators greater control than ever before. Electric differential lock provides optimum traction, and Four Wheel Steering ensures better grip and precision handling. EDiA XL is also equipped with AutoBoost for extra speed and power when you need it most.



SPECIFICATIONS

FB40N	FB50N
FB45N	FB50NH
FB50CN	FB55NH

WHEN RELIABILITY IS EVERYTHING...

MITSUBISHI FORKLIFT TRUCKS

EDiA XL
FB40-55(C)N(H) Series
ELECTRIC COUNTERBALANCE

4.0 – 5.5 tonnes





It is well known that if an operator is comfortable they will be more productive. EDiA XL features a rubber-sealed cabin that minimises micro-vibrations, and the overall noise level inside the cabin is just 65dB. EDiA XL also includes AC and heater options, so temperatures can be adjusted to suit the operator. These features combine to create a stress-free environment where the operator can focus on the task at hand.

For optimal handling, EDiA XL has dual joysticks that offer simultaneous lift and tilt functions, as well as Adaptive Lift Control (ALC) for added stability and little chassis movement when lowering loads.

EDiA XL has the power and performance to complete any task and overcome every challenge - making it the best alternative to an IC truck. EDiA XL is even proven to have the most efficient energy consumption in its class. So you keep going for longer, with zero emissions.

BRAKES

- **Sealed, wet-disc brakes**
  Truck uses regenerative braking in normal driving, so mechanical brakes have a long life span and are virtually maintenance-free.
- **Automatic parking brake with hill hold**
  The truck stops automatically when the accelerator is not engaged, preventing rolling on ramps. No need to remember to use a handle or switch.

DRIVE

- **Easy charging latch**
  Small latch on the side of the truck allows charging cable to be connected without opening the battery door.
- **Sensitive Drive System (SDS)**
  An intuitive driver-assist system for increased safety. Performance is managed according to steer angle and the velocity of foot and finger controls.
- **Intelligent Cornering System**
  The truck senses the angle of a turn and reduces speed early for maximum stability and accurate, positive cornering.
- **ECO mode**
  This mode optimises energy efficiency and gives smoother performance. Ideal for long shifts, training, new users, and part-time users.
- **PRO mode**
  This mode maximises performance parameters, giving full control to more experienced operators in intensive situations.
- **AutoBoost***
  Acceleration and torque boost functions provide more power when needed, such as on ramps.
- **Electric differential lock***
  When activated, both front wheels spin simultaneously, giving the truck better traction and control in slippery conditions.

ELECTRICAL AND CONTROL SYSTEMS

- **Emergency switch**
  Weather-protected emergency switch stops the truck.
- **Sideways battery change**
  Integrated sliding rollers offer quick and easy battery change for multi-shift operations. (Option)

FORKS AND MAST

- **Strong, high-visibility mast**
  Free-lift cylinder structure is optimised with hoses over chains for outstanding visibility.
- **Mechanical side shift with rollers**
  Side shifter minimises static friction and reduces sway for better control.
- **Adjustable lifting and lowering setting**
  Through the multi-functional configuration software Trucktool, the lifting and lowering functions can be adjusted.
- **Adaptive Lift Control (ALC)***
  Allows truck to remain stable with fewer movements when lowering loads from high heights.
- **Passive Sway Control**
  Minimises mast sway, especially in high lifts above 3m.





There is more information on EDiA XL on mitforklift.com

For more extensive information please visit our website mitforklift.com

mft2.eu/ediaxl

* AutoBoost, electric differential lock, and ALC are all in-house designed 'patent pending' features.

Continuing improvement may lead to changes in these specifications

EDiA XL
FB40-55(C)N(H) Series
ELECTRIC COUNTERBALANCE

4.0 – 5.5 tonnes





FRAME AND BODY

- **EasyAccess battery compartment**
  Battery door can be opened 180 degrees for quick and easy battery checks, charging and changes.
- **Battery inspection hatch**
  Operator seat can be tilted forward to give a quick and easy view of battery caps, so the battery does not need to be removed from the truck. (Option)
- **Clear cabin entry**
  Panels are curved to give optimum space for operators when entering/ exiting the truck.
- **Low overhead guard**
  2220 mm high for use in and out of containers.
- **Bright working lights**
  Lights on the mast structure illuminate the load and surrounding area for good visibility, without causing reflections on the cabin windows.

HYDRAULICS

- **High lift traction control**
  Truck senses high lifts over 2.5m and automatically adapts load handling for steadier chassis movement.
- **Load sensing hydraulic system**
  Load handling functions react similarly to different load weights.

OPERATOR COMPARTMENT AND CONTROLS

- **Low Noise Lift**
  Quietest hydraulic pump on the market contributes to low overall noise level (only 65dB).
- **Comfortable cabin**
  Rubber-mounted cabin reduces micro-vibrations and AC option allows operators to adjust temperatures, ensuring compete comfort throughout a shift. (Option)
- **Rear window**
  Can be opened partially for ventilation or fully for emergency exit.
- **Four independently gliding windows**
  Rear windows can glide to the front, this helps with situations such as accessing door controls while reversing.
- **Heater and/or Air Conditioner**
  Operator can heat up or cool down the cabin as required. (Option)
- **Low windshield wiper motor**
  Operator has a good view from the middle of the mast.
- **Unparalleled 360° visibility**
  An optimised mast, wheel, dashboard and counterweight design maximises visibility to load, forks, front and rear wheels - giving safe, confident operation in tight spaces.
- **F2 button**
  This simple thumb control integrates additional key controls without taking your eyes off the load. Options include clamp release and automatic tilt centring.
- **Clear, informative display**
  Full colour and easy to read from all angles. even in direct sunlight. Perfectly positioned for at-a-glance reference, without reducing all-round visibility.
- **Touch-sensitive fingertip controls**
  Controls have a natural-feeling, spring-loaded response: press gently for finer control.
- **ErgoCentric adjustable armrest**
  This allows for a natural hand position, minimising injury and fatigue. Can be easily adjusted with one hand.
- **Fully adjustable driving position**
  Create the perfect seat, arm and steering wheel position for each operator's unique needs.
- **Plenty of storage space**
  Storage for on-board essentials, putting clipboard, mobile phone, drinks bottle and pen all easily to hand.





There is more information on EDiA XL on mitforklift.com

For more extensive information please visit our website mitforklift.com

mft2.eu/ediaxl

EDiA XL
FB40-55(C)N(H) Series
ELECTRIC COUNTERBALANCE

4.0 – 5.5 tonnes





- **Spacious, open cabin**
  The room means that operators of various sizes can benefit from a range of comfortable driving positions.
- **Extra-large low step**
  Entry and exit is easy and safe, thanks to a high-grip surface.
- **Long handle bar**
  Aids safer entry/exit.
- **Flat floor**
  No obstructions and plenty of room for the operator.
- **Dashboard bar**
  Easy to attach options such as monitors without blocking main display.
- **Narrow inclined dashboard**
  This enhances the driver's perception of surroundings - giving even greater visibility to the front and sides of the truck.
- **Dual joysticks**
  Dual joysticks offer simultaneous functions for lift and tilt, and settings can be customised to customer requirements.

STEERING SYSTEM

- **Variable steering ratio**
  Precision steering at high speeds with no need for overcorrections.
- **Four Wheel Steering (4WS)**
  Front axle drive motors turn in separate directions for better grip and precise handling. The rear axle steers through a full 100°, with dual drive motors for instant, smooth turning on the spot and no initial "push". This offers excellent manoeuvrability in tight spaces.
- **Perfectly weighted steering**
  Optimal steering wheel size with a light but firm feel gives confidence and manoeuvrability at all speeds.
- **Mini steering wheel**
  Mini steering wheel allows operators to maintain a relaxed driving position and better view, ideal for longer shifts. (Option)

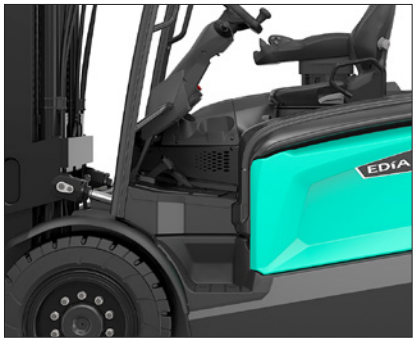



There is more information on EDiA XL on mitforklift.com

For more extensive information please visit our website mitforklift.com

mft2.eu/ediaxl

EDiA XL

OPTIONAL LI-ION BATTERY SYSTEMS

MAKE YOUR FORKLIFT GO EVEN FURTHER



Tried, tested and proven in the field, lead-acid batteries have been the long-standing top choice for companies employing electric lift trucks. However, with long charging times, demanding maintenance requirements, the need for extra batteries and high risk of operator misuse, it can be a challenge. Fortunately, there's a new battery system on the block: Li-ion from Mitsubishi Forklift Trucks.

Designed to meet your business' demands - including multi-shift (24/7) operations - without the need for spare batteries, our high-performance Li-ion battery system is up to 30% more efficient than lead-acid counterparts. Plus, it's virtually error-proof, thanks to its ultra-low-maintenance design.

- **Gas-emission free and space efficient operation**
  with no need for air ventilation and/or closed charging room.
- **Exceptional high battery & charger efficiency**
  due to state-of-the-art technology, delivers up to 30% more power efficiency than lead-acid batteries.
- **Maintenance free design**
  Eliminates the need for daily checks and water re-fills by operator, and reduces the risk of operators damaging cells.
- **No spare batteries and charging room required**
  saves space and costs in multi-shift application to maximise profitability.
- **Quick charge capabilities**
  mean that just 15 minutes is all your battery needs to keep your truck going a few more hours. (It only takes from 1 hour to fully charge a completely discharged battery.)
- **Higher sustained voltage**
  ensures more consistent lifting and driving performance, which is particularly noticeable towards the end of a shift.
- **Active protection componentry**
  this continuously monitors the system, highlighting potential issues, including misuse.
- **High safety features include**
  Short circuit protection, deep-discharge and overcharge protection, individual cell temperature and voltage monitoring.
- **On-the-go performance and monitoring**
  is possible thanks to the system's integrated monitoring system with easy-to-read display unit.
- **Wide choice of battery and charger capacities**
  The most suitable power supply can be matched to the exact requirements of a specific application.





Fully integrated Li-ion battery

Features a sophisticated CANbus communication and an automatic ON/OFF synchronization between battery and truck. Battery level, notifications and alarms are integrated into the truck display, to secure clear and easy overview for the truck operator.

There is more information on Li-ion on mitforklift.com

For more extensive information please visit our website mitforklift.com

mft2.eu/lion

Li-ion battery option is available in selected regions.

Continuing improvement may lead to changes in these specifications

VDI - PERFORMANCE & DIMENSIONS

	CHARACTERISTICS			Mitsubishi Forklift Trucks	Mitsubishi Forklift Trucks	Mitsubishi Forklift Trucks
1.1	Manufacturer (abbreviation)			FB40N	FB45N	FB50CN
1.2	Manufacturer's model designation			Battery	Battery	Battery
1.3	Power source: (battery, diesel, LP gas, petrol)			Seated	Seated	Seated
1.4	Operator type: pedestrian, (operator)-standing, -seated			4000	4500	4990
1.5	Load capacity	Q	kg	500	500	500
1.6	Load center distance	c	mm	540	540	540
1.8	Load distance, axle to fork face	x	mm	1946	1946	1946
1.9	Wheelbase	y	mm			
	WEIGHT					
2.1	Truck weight, without load / including battery (simplex mast, lowest lift height)		kg	7290	7648	7991
2.2	Axle loading with maximum load, front / rear (simplex mast, lowest lift height)		kg	10040 / 1250	10795 / 1353	11574 / 1417
2.3	Axle loading without load, front / rear (simplex mast, lowest lift height)		kg	3902 / 3388	3890 / 3758	3902 / 4089
	WHEELS, DRIVE TRAIN					
3.1	Tyres: V=solid, L=pneumatic, SE=solid pneumatic - front / rear			SE	SE	SE
3.2	Tyre dimensions, front			250x15 (710)	250x15 (710)	355 / 50-15 (710)
3.3	Tyre dimensions, rear			7.00x12 (650)	7.00x12 (650)	7.00x12 (650)
3.5	Number of wheels, front / rear (x=driven)			2X / 2	2X / 2	2X / 2
3.6	Truck width (center of tyres), front	b10	mm	1143	1143	1154
3.7	Truck width (center of tyres), rear	b11	mm	1169	1169	1169
	DIMENSIONS					
4.1	Mast tilt, forwards / backwards	α / β	°	6 / 8	6 / 8	6 / 8
4.2	Height with mast lowered (see tables)	h1	mm	2420	2420	2420
4.3	Free lift (see tables)	h2	mm	150	150	150
4.4	Lift height (see tables)	h3	mm	3300	3300	3300
4.5	Overall height with mast raised	h4	mm	4205	4205	4205
4.7	Height to top of overhead guard	h6	mm	2340	2340	2340
4.8	Seat height	h7	mm	1320	1320	1320
4.12	Tow coupling height	h10	mm	675	675	675
4.19	Overall length	l1	mm	4025	4025	4025
4.20	Length to fork face (includes fork thickness)	l2	mm	2825	2825	2825
4.21	Overall width	b1/b2	mm	1370	1370	1450
4.22	Fork dimensions (thickness, width, length)	s / e / l	mm	50 / 150 / 1200	50 / 150 / 1200	50 / 150 / 1200
4.23	Fork carriage to DIN 15 173 A/B/no			3A	3A	3A
4.24	Fork carriage width	b3	mm	1190	1190	1190
4.31	Ground clearance under mast, with load	m1	mm	150	150	150
4.32	Ground clearance at center of wheelbase, with load (forks lowered)	m2	mm	150	150	150
4.33	Working aisle width with 1000 x 1200 mm pallets, crosswise	Ast	mm	4125	4125	4125
4.34a	Working aisle width with 800 x 1200 mm pallets, crosswise	Ast	mm	3938	3938	3938
4.34b	Working aisle width with 800 x 1200 mm pallets, lengthwise	Ast	mm	4264	4264	4264
4.35	Turning circle radius	Wa	mm	2289	2289	2289
4.36	Minimum distance between centers of rotation	b13	mm	49	49	49
	PERFORMANCE					
5.1	Travel speed, with / without load		km/h	18 / 20	18 / 20	18 / 20
5.2	Lifting speed, with / without load		m/s	0.41 / 0.53	0.38 / 0.53	0.35 / 0.53
5.3	Lowering speed, with / without load		m/s	0.53 / 0.51	0.52 / 0.51	0.52 / 0.51
5.5	Rated drawbar pull, with / without load		N	16000 / 16400	16800 / 17700	16800 / 17700
5.6	Maximum drawbar pull, with / without load (5 min short duty)		N	17300 / 18400	17300 / 18400	17300 / 18400
5.7	Gradeability, with / without load		%	15 / 23	15 / 23	14 / 22
5.8	Maximum gradeability, with / without load		%	15.8 / 26.6	15.6 / 23.7	14.6 / 22.6
5.9	Acceleration time (10 metres) with / without load		s	4.6 / 3.9	4.7 / 3.9	4.8 / 4.0
5.10	Service brakes (mechanical / hydraulic / electric / pneumatic)			Hydraulic	Hydraulic	Hydraulic
	ELECTRIC MOTORS					
6.1	Drive motor capacity (60 min. short duty)		kW	2x16	2x16	2x16
6.2	Lift motor output at 15% duty factor		kW	34	34	34
6.3	Battery to DIN 43 531 / 35 / 36 A/B/C/no			DIN 43 536/A	DIN 43 536/A	DIN 43 536/A
6.4	Battery voltage/capacity at 5-hour discharge		V/Ah	80 / 775	80 / 775	80 / 775
6.5	Battery weight		kg	1863	1863	1863
6.6a	Energy consumption according to DIN EN 16796		kWh / h	10.2[1)]	10.6[1)]	11.0[1)]
	MISCELLANEOUS					
8.1	Type of drive control			AC	AC	AC
10.1	Maximum operating pressure for attachments		bar	210	210	210
10.2	Oil flow for attachments		l/min	45	45	45
10.7	Noise level, value at operator's ear (EN 12053)		dB(A)	65	65	65
10.8	Towing coupling design / DIN type, ref.			15 170	15 170	15 170

Continuing improvement may lead to changes in these specifications

EDiA XL

FB40-50(C)N Series

ELECTRIC COUNTERBALANCE

4.0 - 5.0 tonnes



FB40(C)N

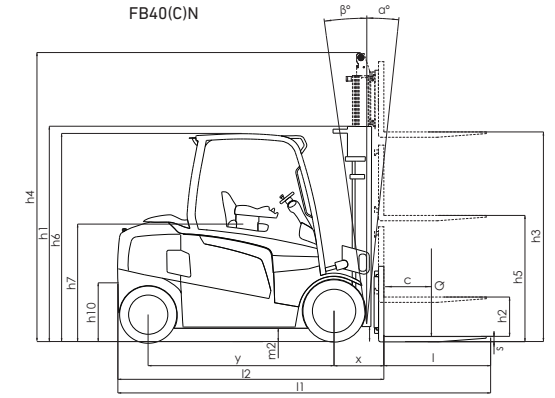

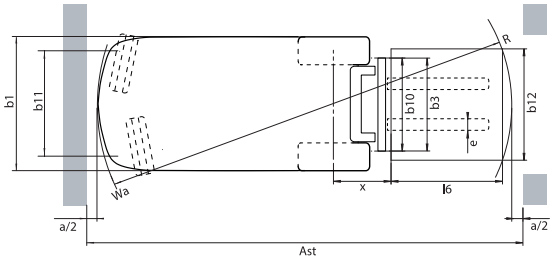

Ast = Wa + R + a
Ast = Working aisle width with load
Wa = Turning radius
a = Safety clearance = 2 x 100 mm
R = $\sqrt{(l6 + x)^2 + (b12 / 2 - b13)^2}$
b12 = Pallet width (1200 mm)

h1 Height with mast lowered
h2 Standard free lift
h3 Lift height
h4 Height with mast raised
h5 Full free lift
Q Lifting capacity, rated load
c Load centre (distance)

1) Measured with 60 cycles test
2) Measured with 45 cycles test

VDI - PERFORMANCE & DIMENSIONS

	CHARACTERISTICS			Mitsubishi Forklift Trucks	Mitsubishi Forklift Trucks	Mitsubishi Forklift Trucks
1.1	Manufacturer (abbreviation)			FB50N	FB50NH	FB55NH
1.2	Manufacturer's model designation			Battery	Battery	Battery
1.3	Power source: (battery, diesel, LP gas, petrol)			Seated	Seated	Seated
1.4	Operator type: pedestrian, (operator)-standing, -seated			4990	5000	5500
1.5	Load capacity	Q	kg	500	600	600
1.6	Load center distance	c	mm	540	560	560
1.8	Load distance, axle to fork face	x	mm	2090	2090	2090
1.9	Wheelbase	y	mm			
	WEIGHT					
2.1	Truck weight, without load / including battery (simplex mast, lowest lift height)		kg	8347	8472	8711
2.2	Axle loading with maximum load, front / rear (simplex mast, lowest lift height)		kg	11563 / 1784	12009 / 1463	12799 / 1412
2.3	Axle loading without load, front / rear (simplex mast, lowest lift height)		kg	4075 / 4272	4234 / 4238	4246 / 4465
	WHEELS, DRIVE TRAIN					
3.1	Tyres: V=solid, L=pneumatic, SE=solid pneumatic - front / rear			SE	SE	SE
3.2	Tyre dimensions, front			355 / 50-15 (710)	355 / 50-15 (710)	355 / 50-15 (710)
3.3	Tyre dimensions, rear			7.00x12 (650)	7.00x12 (650)	7.00x12 (650)
3.5	Number of wheels, front / rear (x=driven)			2X / 2	2X / 2	2X / 2
3.6	Truck width (center of tyres), front	b10	mm	1154	1154	1154
3.7	Truck width (center of tyres), rear	b11	mm	1169	1169	1169
	DIMENSIONS					
4.1	Mast tilt, forwards / backwards	α / β	°	6/8	6/8	6/8
4.2	Height with mast lowered (see tables)	h1	mm	2420	2420	2420
4.3	Free lift (see tables)	h2	mm	150	160	160
4.4	Lift height (see tables)	h3	mm	3300	3300	3300
4.5	Overall height with mast raised	h4	mm	4205	4345	4345
4.7	Height to top of overhead guard	h6	mm	2340	2340	2340
4.8	Seat height	h7	mm	1320	1320	1320
4.12	Tow coupling height	h10	mm	675	675	675
4.19	Overall length	l1	mm	4170	4190	4190
4.20	Length to fork face (includes fork thickness)	l2	mm	2970	2990	2990
4.21	Overall width	b1/b2	mm	1450	1450	1450
4.22	Fork dimensions (thickness, width, length)	s / e / l	mm	50 / 150 / 1200	60 / 150 / 1200	60 / 150 / 1200
4.23	Fork carriage to DIN 15 173 A/B/no			3A	4A	4A
4.24	Fork carriage width	b3	mm	1190	1190	1190
4.31	Ground clearance under mast, with load	m1	mm	150	150	150
4.32	Ground clearance at center of wheelbase, with load (forks lowered)	m2	mm	150	150	150
4.33	Working aisle width with 1000 x 1200 mm pallets, crosswise	Ast	mm	4273	4291	4291
4.34a	Working aisle width with 800 x 1200 mm pallets, crosswise	Ast	mm	4086	4104	4104
4.34b	Working aisle width with 800 x 1200 mm pallets, lengthwise	Ast	mm	4412	4439	4439
4.35	Turning circle radius	Wa	mm	2434	2434	2434
4.36	Minimum distance between centers of rotation	b13	mm	49	49	49
	PERFORMANCE					
5.1	Travel speed, with / without load		km/h	18 / 20	18 / 20	18 / 20
5.2	Lifting speed, with / without load		m/s	0.35 / 0.53	0.35 / 0.53	0.32 / 0.53
5.3	Lowering speed, with / without load		m/s	0.52 / 0.51	0.52 / 0.51	0.51 / 0.51
5.5	Rated drawbar pull, with / without load		N	17600 / 18100	17500 / 17700	17600 / 18000
5.6	Maximum drawbar pull, with / without load (5 min short duty)		N	21500 / 22600	21500 / 22600	21500 / 22600
5.7	Gradeability, with / without load		%	14 / 22	13.5 / 21.5	13 / 21
5.8	Maximum gradeability, with / without load		%	16.6 / 28.7	16.5 / 28.2	16.4 / 27.3
5.9	Acceleration time (10 metres) with / without load		s	4.6 / 4.1	4.7 / 4.1	4.8 / 4.1
5.10	Service brakes (mechanical / hydraulic / electric / pneumatic)			Hydraulic	Hydraulic	Hydraulic
	ELECTRIC MOTORS					
6.1	Drive motor capacity (60 min. short duty)		kW	2x16	2x16	2x16
6.2	Lift motor output at 15% duty factor		kW	34	34	34
6.3	Battery to DIN 43 531 / 35 / 36 A/B/C/no			DIN 43 536/A	DIN 43 536/A	DIN 43 536/A
6.4	Battery voltage/capacity at 5-hour discharge		V/Ah	80 / 930	80 / 930	80 / 930
6.5	Battery weight		kg	2178	2178	2178
6.6a	Energy consumption according to DIN EN 16796		kWh / h	11.2[1)]	7.8[2)]	8.2[2)]
	MISCELLANEOUS					
8.1	Type of drive control			AC	AC	AC
10.1	Maximum operating pressure for attachments		bar	210	210	210
10.2	Oil flow for attachments		l/min	45	45	45
10.7	Noise level, value at operator's ear (EN 12053)		dB(A)	65	65	65
10.8	Towing coupling design / DIN type, ref.			15 170	15 170	15 170

Continuing improvement may lead to changes in these specifications

EDiA XL

FB50-55N(H) Series

ELECTRIC COUNTERBALANCE

5.0 - 5.5 tonnes



FB50N

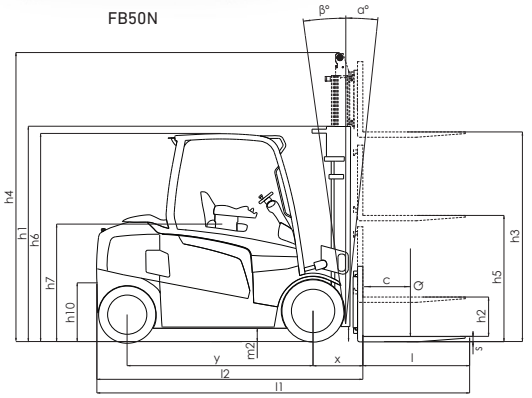

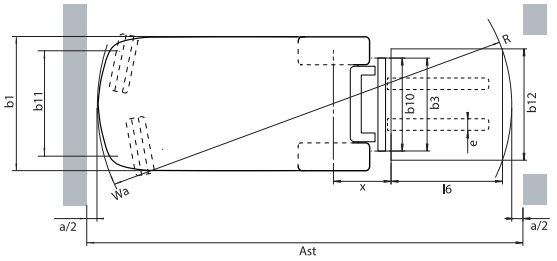

Ast = Wa + R + a
Ast = Working aisle width with load
Wa = Turning radius
a = Safety clearance = 2 x 100 mm
R = $\sqrt{(l6 + x)^2 + (b12 / 2 - b13)^2}$
b12 = Pallet width (1200 mm)

h1 Height with mast lowered
h2 Standard free lift
h3 Lift height
h4 Height with mast raised
h5 Full free lift
Q Lifting capacity, rated load
c Load centre (distance)

1) Measured with 60 cycles test
2) Measured with 45 cycles test

MAST PERFORMANCE AND CAPACITY

EDiA XL

FB40-55(C)N(H) Series

FB40N / FB45N / FB50CN / FB50N							FB40N		FB45N		FB50CN		FB50N	
MAST TYPE	h3 mm	h1 mm	h4 mm	h2 / h5** mm	Tilt angle fwd/rew STD	Tilt angle fwd/rew Cabin	Q@ c=500 mm kg	Q@ c=600 mm kg	Q@ c=500 mm kg	Q@ c=600 mm kg	Q@ c=500 mm kg	Q@ c=600 mm kg	Q@ c=500 mm kg	Q@ c=600 mm kg
SIMPLEX	3050	2270*	3905	150	6 - 8	6 - 8	4000	4000	4500	4500	5000	4825	5000	4825
	3350	2420	4205	150	6 - 8	6 - 8	4000	4000	4500	4500	5000	4825	5000	4825
	3550	2520	4405	150	6 - 8	6 - 8	4000	4000	4500	4500	5000	4825	5000	4825
	3750	2620	4605	150	6 - 8	6 - 8	4000	4000	4500	4500	5000	4825	5000	4825
	4050	2870	4905	150	6 - 8	6 - 8	4000	4000	4500	4500	5000	4825	5000	4825
	4550	3120	5405	150	6 - 8	6 - 8	4000	4000	4500	4500	5000	4825	5000	4825
	5050	3370	5905	150	6 - 8	6 - 8	4000	3900	4500	4350	5000	4775	5000	4825
	5550	3620	6405	150	6 - 8	6 - 8	4000	3775	4500	4225	4975	4625	5000	4825
	6050	3870	6905	150	6 - 8	6 - 8	3925	3650	3900	3875	4775	4500	4950	4825
TRIPLEX	3750	2070*	4627	1193	6 - 8	6 - 6	4000	4000	4500	4475	5000	4825	5000	4825
	4090	2190*	4967	1313	6 - 8	6 - 6	4000	4000	4500	4475	5000	4825	5000	4825
	4360	2280*	5237	1403	6 - 8	6 - 8	4000	4000	4500	4475	5000	4825	5000	4825
	4550	2340*	5427	1463	6 - 8	6 - 8	4000	3975	4500	4450	5000	4825	5000	4825
	4800	2420	5677	1543	6 - 8	6 - 8	4000	3925	4500	4400	5000	4800	5000	4825
	5100	2520	5977	1643	6 - 8	6 - 8	4000	3850	4500	4300	5000	4725	5000	4825
	5550	2670	6427	1793	6 - 8	6 - 8	4000	3750	4500	4200	4950	4600	5000	4825
	6050	2870	6927	1993	6 - 8	6 - 8	3875	3600	4025	4000	4775	4425	5000	4825
	6550	3070	7427	2193	6 - 8	6 - 8	3600	3475	3075	3050	3725	3675	3900	3875
	7050	3270	7927	2393	6 - 8	6 - 8	2850	2825	2425	2425	2875	2825	3075	3050

Standard lifting carriage, Forks L1000, L1100, L1150 and L1200

* Lower than overhead guard

** h5 does not include load backrest (with load backrest it is 207mm smaller).

FB50NH / FB55NH							FB50NH	FB55NH
MAST TYPE	h3 mm	h1 mm	h4 mm	h2 / h5 mm	Tilt angle fwd/rew STD	Tilt angle fwd/rew Cabin	Q@ c=600 mm kg	Q@ c=600 mm kg
SIMPLEX	3060	2270*	4045	160	6 - 8	6 - 8	5000	5500
	3360	2420*	4345	160	6 - 8	6 - 8	5000	5500
	3560	2520	4545	160	6 - 8	6 - 8	5000	5500
	3760	2620	4745	160	6 - 8	6 - 8	5000	5500
	4060	2870	5045	160	6 - 8	6 - 8	5000	5500
	4560	3120	5545	160	6 - 8	6 - 8	5000	5500
	5060	3370	6045	160	6 - 8	6 - 8	5000	5500
	5560	3620	6545	160	6 - 8	6 - 8	5000	5500
	6060	3870	7045	160	6 - 8	6 - 8	4950	4725
TRIPLEX	3760	2070*	4757	1073	6 - 8	6 - 6	5000	5500
	4100	2190*	5097	1193	6 - 8	6 - 6	5000	5500
	4370	2280*	5367	1283	6 - 8	6 - 8	5000	5500
	4560	2340*	5557	1343	6 - 8	6 - 8	5000	5500
	4810	2420*	5807	1423	6 - 8	6 - 8	5000	5500
	5110	2520	6107	1523	6 - 8	6 - 8	5000	5500
	5560	2670	6557	1673	6 - 8	6 - 8	5000	5500
	6060	2870	7057	1873	6 - 8	6 - 8	5000	4775
	6560	3070	7557	2073	6 - 8	6 - 8	3800	3625
	7060	3270	8057	2273	6 - 8	6 - 8	2975	2825

Standard lifting carriage, Forks L1000, L1100, L1150 and L1200

* Lower than overhead guard

BATTERY DIMENSIONS		FB40N	FB45N	FB50CN	FB50N	FB50NH	FB55NH
Battery voltage	V	80	80	80	80	80	80
Capacity at a 5-hour discharge	Ah	775	775	775	930	930	930
Battery weight, Min.	kg	1760	1760	1760	1760	2060	2060
Battery weight, Max.	kg	1960	1960	1960	1960	2290	2290

Capacities at various load centres

Simplex - h3 = 3350 mm

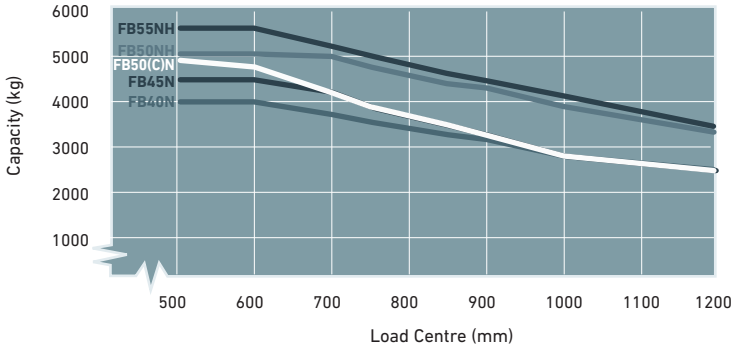

STANDARD EQUIPMENT & OPTIONS

EDiA XL

FB40-55(C)N(H) Series

ELECTRIC COUNTERBALANCE

4.0 – 5.5 tonnes

● = Standard
● = Option

	FB40N	FB45N	FB50CN	FB50N	FB50NH	FB55NH
GENERAL						
4-wheel chassis, 80 volts, front wheel dual drive	●	●	●	●	●	●
Key pre-set economy or high performance mode (ECO / PRO)	●	●	●	●	●	●
3-valve hydraulic fingertip control mounted on an ergonomic armrest	●	●	●	●	●	●
Variable hydraulic speed control functions	●	●	●	●	●	●
Battery compartment side door	●	●	●	●	●	●
Multifunctional interactive full colour display	●	●	●	●	●	●
Intelligent curve control	●	●	●	●	●	●
Tiltable steering column	●	●	●	●	●	●
TruckTool setup and diagnostics	●	●	●	●	●	●
PDS (Seat Switch Timeout = all functions are disabled, the truck will go into the stop mode, automatically applied parking brake)	●	●	●	●	●	●
Full-suspension vinyl Grammer MSG65 seat	●	●	●	●	●	●
CE name plates -language markings	●	●	●	●	●	●
Operations and Maintenance Manual	●	●	●	●	●	●
DIN battery connectors on frame	●	●	●	●	●	●
Back-up drive horn button	●	●	●	●	●	●
Battery door detection sensor	●	●	●	●	●	●
Fingertip control armrest	●	●	●	●	●	●
Manual control levers	●	●	●	●	●	●
Dual Joystick	●	●	●	●	●	●
Mini steering wheel	●	●	●	●	●	●
Air conditioner	●	●	●	●	●	●
Heater	●	●	●	●	●	●
POWER SOURCE						
Integrated Li-ion battery*	●	●	●	●	●	●
Lead acid battery	●	●	●	●	●	●
FRAME						
Battery sideway exchange chassis	●	●	●	●	●	●
Battery roller bed	●	●	●	●	●	●
Battery tray	●	●	●	●	●	●
Battery sideway exchange tool	●	●	●	●	●	●
Battery inspection hatch	●	●	●	●	●	●
Easy charging	●	●	●	●	●	●
T-bar battery stand	●	●	●	●	●	●
LIGHTING						
LED work lights	●	●	●	●	●	●
Red side lines	●	●	●	●	●	●
Amber strobe	●	●	●	●	●	●
Amber strobe mounted low	●	●	●	●	●	●
"Blue point" rear light	●	●	●	●	●	●
"Blue point" rear light mounted low	●	●	●	●	●	●
ELECTRICAL SYSTEM						
Smart backup alarm	●	●	●	●	●	●
Current output	●	●	●	●	●	●
12V connector	●	●	●	●	●	●
Operator presence pedal	●	●	●	●	●	●
Electronic differential lock	●	●	●	●	●	●
Dual pedal layout	●	●	●	●	●	●
Drive direction selection switch on ergonomic armrest (Forward-Backward)*Only on FC controls	●	●	●	●	●	●
Drive direction lever in steering column (Forward-Neutral-Reverse)	●	●	●	●	●	●
Road light kit	●	●	●	●	●	●
PIN code access with start switch	●	●	●	●	●	●
Automated lift controls	●	●	●	●	●	●
Automatic tilt centering via the F2 button with FC TILT/C	●	●	●	●	●	●
Load weight indicator	●	●	●	●	●	●

* Li-ion battery option is available in selected regions.



Battery compartment side door



Load backrest



Full-suspension vinyl Grammer seat

Continuing improvement may lead to changes in these specifications

STANDARD EQUIPMENT & OPTIONS

EDiA XL

FB40-55(C)N(H) Series

ELECTRIC COUNTERBALANCE

4.0 – 5.5 tonnes

● = Standard
● = Option

	FB40N	FB45N	FB50CN	FB50N	FB50NH	FB55NH
OPERATOR'S CABIN						
Grammer MSG65 seat	●	●	●	●	●	●
Grammer MSG65 with heater	●	●	●	●	●	●
Grammer MSG65 with cloth upholstery	●	●	●	●	●	●
Grammer MSG65 with cloth upholstery and heater	●	●	●	●	●	●
Grammer MSG75	●	●	●	●	●	●
Grammer MSG75 with heater	●	●	●	●	●	●
Grammer MSG75 with cloth upholstery	●	●	●	●	●	●
Grammer MSG75 with cloth upholstery and heater	●	●	●	●	●	●
Backrest extension	●	●	●	●	●	●
ACCESSORIES						
Rear view mirror	●	●	●	●	●	●
External rear view mirror	●	●	●	●	●	●
Dead angle mirror	●	●	●	●	●	●
Wide view mirror	●	●	●	●	●	●
A4 size paper holder	●	●	●	●	●	●
Camera	●	●	●	●	●	●
Accessory clamp	●	●	●	●	●	●
Fire extinguisher	●	●	●	●	●	●
CABIN						
Default OHG	●	●	●	●	●	●
Low OHG	●	●	●	●	●	●
Battery Inspection OHG	●	●	●	●	●	●
Front screen and roof with wiper / washer	●	●	●	●	●	●
Low front screen and roof with wiper / washer	●	●	●	●	●	●
Front screen and roof with wiper / washer with battery inspection	●	●	●	●	●	●
Safety doors	●	●	●	●	●	●
Delux cabin	●	●	●	●	●	●
EXTERIOR						
Special colour (RAL) for the frame and counterweight	●	●	●	●	●	●
FORKS & CARRIAGE						
Various fork lengths (1000 - 2400mm) as well as fork deletion	●	●	●	●	●	●
Side shifter W1000mm	●	●	●	●	●	●
Integrated side shifter W1000mm	●	●	●	●	●	●
Fork positioner+ integrated side shifter	●	●	●	●	●	●
Load backrest	●	●	●	●	●	●
HYDRAULIC SYSTEM						
3/4/5-way valve armrest-mounted fingertip control	●	●	●	●	●	●
3/4-way valve manual control	●	●	●	●	●	●
Lift Control	●	●	●	●	●	●
Double action FC 3 v, for clamp usage	●	●	●	●	●	●
Double action FC 4 v, for clamp usage	●	●	●	●	●	●
Double action MC 3 v, for clamp usage	●	●	●	●	●	●
Double action MC 4 v, for clamp usage	●	●	●	●	●	●
Hydraulic accumulator	●	●	●	●	●	●
Adjustable hydraulic pressure (for 3rd and 4th valve)	●	●	●	●	●	●
Food grade hydraulic oil	●	●	●	●	●	●
Biodegradable hydraulic oil	●	●	●	●	●	●
Cold area hydraulic oil VG15	●	●	●	●	●	●
Hot area hydraulic oil VG46	●	●	●	●	●	●
3-way piping	●	●	●	●	●	●
4-way piping	●	●	●	●	●	●
TYRES						
Solid Pneumatic Tyres	●	●	●	●	●	●
Pneumatic Tyres	●	●	●	●	●	●
Non-marking Solid Tyres	●	●	●	●	●	●
Cushion tyres	●	●	●	●	●	●
Solid Pneumatic Twin Tyres	●	●	●	●	●	●

Continuing improvement may lead to changes in these specifications



Cabin with roadlight kit



Dual joystick



Mini steering wheel

WHEN RELIABILITY IS EVERYTHING...



EDiA
THE ELECTRIC DIAMOND

The family name EDiA appears proudly on our award-winning range of electric forklift trucks.

The reputation that Mitsubishi Forklift Trucks enjoys for endurance and reliability has likened them to the quality and enduring value of a diamond.

Like any product bearing the "MITSUBISHI" name our materials handling equipment benefits from the tremendous heritage, huge resources and cutting-edge technology of one of the world's largest corporations – Mitsubishi Heavy Industries Group.

Engineering spacecraft, jet planes, power plants and more, MHI specialises in those technologies where performance, dependability and superiority decide your success or failure...

So when we promise you quality, reliability and value for money, you know it's a guarantee we have the power to deliver.

That's why every model in our award-winning and comprehensive range of lift trucks and warehouse equipment is built to a high specification – to ensure it keeps working for you. Day after day. Year after year. Whatever the job. Whatever the conditions.

YOU'LL NEVER WORK ALONE

As your local authorised dealer, we are here to keep your trucks working – through our extensive experience, our technical excellence and our commitment to customer care.

We are your local experts, backed by efficient channels to the entire organisation of Mitsubishi Forklift Trucks.

No matter where you are, we are close by – with the capability to meet your needs.

Discover how Mitsubishi Forklift Trucks give you more from your local authorised dealer or when you visit our website www.mitforklift.com











Performance specifications may vary depending on standard manufacturing tolerances, vehicle condition, types of tyres, floor or surface conditions, applications or operating environment. Trucks may be shown with non-standard options. Specific performance requirements and locally available configurations should be discussed with your distributor of Mitsubishi forklift trucks. We follow a policy of continual product improvement. For this reason, some materials, options and specifications could change without notice.

info@mitforklift.com

CESM2113 (04/21) © 2021 MLE

Mitsubishi Logisnext Europe B.V.
Hefbrugweg 77, 1332 AM Almere
The Netherlands
Tel: +31 (0)36 5494 411

MITSUBISHI FORKLIFT BRIEFING
mft2.eu/fb

App Store
Google Play
mft2.eu/apps

YouTube
mft2.eu/youtube

t2.eu/facebook

MITSUBISHI FORKLIFT TRUCKS