PRELIMINARY
SPECIFICATIONS

MOVE THE WORLD FORWARD MITSUBISHI HEAVY INDUSTRIES GROUP

FB60-120N(H) Series

ELECTRIC COUNTERBALANCE

6.0 – 12.0 tonnes

GREAT POWER
EXCEPTIONAL ECONOMY

As the largest electric models in the Mitsubishi Forklift Trucks range, the FB60-120N(H) series delivers huge power, with no compromises to performance and precision. Best-in-class acceleration and smart energy use makes for a highly efficient addition to any work site.



SPECIFICATIONS

FB60N	
FB60NH	FB80N-900
FB65N	FB80NH-900
FB65NH	FB90N
FB70N	FB90NH
FB70NH	FB100N
FB80N	FB100NH
FB80NH	FB120NH

WHEN RELIABILITY IS EVERYTHING...

MITSUBISHI FORKLIFT TRUCKS

FB60-120N(H) Series

ELECTRIC COUNTERBALANCE

6.0 – 12.0 tonnes





BRAKES

- **High-efficiency regenerative braking**
  This gives more effective control and reduces brake wear.
- **Automatic parking brake**
  Safe, effective immobilisation of the truck with minimum effort.

DRIVE

- **High-lift traction control**
  Activated at heights around 2.5m to ensure steadier and more controllable chassis movements in high lifts.
- **Four Wheel Steering (4WS)**
  Front axle drive motors turn in separate directions for better grip and precise handling. The rear axle steers through a full 101°, with dual drive motors for instant, smooth turning on the spot and no initial 'push'. This offers excellent manoeuvrability in tight spaces. (H models only)
- **Powerful AC drive motors**
  These generate excellent acceleration, torque and fast travel speed.
  IP54 rated.

ELECTRICAL AND CONTROL SYSTEMS

- **Choice of direction systems**
  Forward/reverse double pedal system, or drive direction lever on steering column.

FORKS AND MAST

- **Passive Sway Control**
  Minimises mast sway, especially in high lifts above 3m.
- **Low Noise Lift**
  Quietest hydraulic pump on the market contributes to low overall noise level (only 65dB).
- **Strong, high-visibility mast**
  Free-lift cylinder structure is optimised with hoses over chains for outstanding visibility.
- **High tilt cylinders**
  Better mast support for greater stability.

FRAME AND BODY

- **EasyAccess batteries**
  Batteries are not covered by doors so are easy to access.
- **Single tyre models**
  This unique option is ideal for indoor use as there is no need to widen the truck.
- **Rapid battery exchange**
  With 2 x 48v batteries (one on each side), each battery can be easily moved with a pallet truck for a quicker, simpler battery change.

HYDRAULICS

- **Load sensing hydraulic system**
  Load handling functions react similarly to different load weights.
- **Hydraulic cooler**
  This maintains temperature to improve efficiency and extend component lifespan. (H models).
- **Hydraulic steering system**
  Ensures accurate and precise load handling for greater productivity.





For more information on FB60-120N(H) Series please visit our website

mft2.eu/fb60nh

FB60-120N(H) Series

ELECTRIC COUNTERBALANCE

6.0 – 12.0 tonnes





OPERATOR COMPARTMENT AND CONTROLS

- **Long handle bar**
  Aids safer entry/exit.
- **Fully adjustable driving position**
  Create the perfect seat, arm and steering wheel position for each operator's unique needs.
- **Spacious, open cabin**
  Operators of various sizes can easily find comfortable driving positions.
- **Extra-large low step**
  Entry and exit is easy and safe, thanks to a high-grip surface.
- **Comfortable cabin**
  Rubber-mounted cabin reduces micro-vibrations and AC option allows operators to adjust temperatures, ensuring compete comfort throughout a shift. (Option)
- **Dual joysticks**
  Dual joysticks offer simultaneous functions for lift and tilt, and settings can be customised to customer requirements. Easy to use even while wearing heavy gloves. (Option)
- **Touch-sensitive fingertip controls**
  Controls have a natural-feeling, spring-loaded response: press gently for finer control.
- **Ergonomic self-centring steering wheel with knob at 8 o'clock position**
  Exceptional control and comfort.
- **Rear camera**
  Offers the operator better views behind the truck.
- **Low seat**
  Similar seat height to many IC engine trucks, so operators don't need to climb as far as they do with many large electric trucks**.**
- **Clear, informative display**
  Full colour and easy to read from all angles. even in direct sunlight. Perfectly positioned for at-a-glance reference, without reducing all-round visibility.



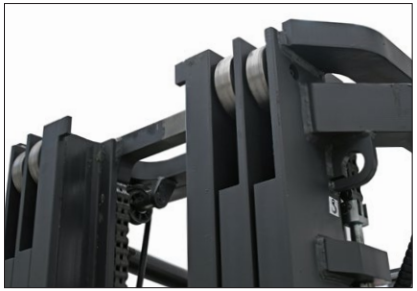

For more information on FB60-120N(H) Series please visit our website

mft2.eu/fb60nh

VDI - PERFORMANCE & DIMENSIONS

FB60-120N(H) Series

ELECTRIC COUNTERBALANCE

6.0 – 7.0 tonnes

	CHARACTERISTICS			Mitsubishi Forklift Trucks				
				FB60N	**FB60NH**	**FB65N**	**FB65NH**	**FB70N**
1.1	Manufacturer (abbreviation)			Battery	Battery	Battery	Battery	Battery
1.2	Manufacturer's model designation			Seated	Seated	Seated	Seated	Seated
1.3	Power source: (battery, diesel, LP gas, petrol)							
1.4	Operator type: pedestrian, (operator)-standing, -seated							
1.5	Load capacity	Q	kg	6000	6000	6500	6500	7000
1.6	Load center distance	c	mm	600	600	600	600	600
1.8	Load distance, axle to fork face	x	mm	650	650	650	650	650
1.9	Wheelbase	y	mm	2250	2250	2250	2250	2250
	WEIGHT							
2.1	Truck weight, without load / including battery (simplex mast, lowest lift height)		kg	10260	10260	10430	10430	10770
2.2	Axle loading with maximum load, front / rear (simplex mast, lowest lift height)		kg	14523 / 1737	14523 / 1737	15316 / 1614	15316 / 1614	16124 / 1646
2.3	Axle loading without load, front / rear (simplex mast, lowest lift height)		kg	5190 / 5070	5190 / 5070	5200 / 5230	5200 / 5230	5240 / 5530
	WHEELS, DRIVE TRAIN							
3.1	Tyres: V=solid, L=pneumatic, SE=solid pneumatic - front / rear			SE	SE	SE	SE	SE
3.2	Tyre dimensions, front			8.25-15	8.25-15	8.25-15	8.25-15	8.25-15
3.3	Tyre dimensions, rear			22×9-16 23×10-12	22×9-16 23×10-12	22×9-16 23×10-12	22×9-16 23×10-12	22×9-16 23×10-12
3.5	Number of wheels, front / rear (x=driven)			2×/2	2×/2	2×/2	2×/2	2×/2
3.6	Truck width (center of tyres), front	b10	mm	1305 1375 1380	1306 1375 1380	1307 1375 1380	1308 1375 1380	1309 1375 1380
3.7	Truck width (center of tyres), rear	b11	mm	1220 1225	1221 1225	1222 1225	1223 1225	1224 1225
	DIMENSIONS							
4.1	Mast tilt, forwards / backwards	α/β	°	5.5/6(2)	5.5/6(2)	5.5/6(2)	5.5/6(2)	5.5/6(2)
4.2	Height with mast lowered	h1	mm	2680	2680	2680	2680	2680
4.3	Free lift	h2	mm	100	100	100	100	100
4.4	Lift height	h3	mm	3400	3400	3400	3400	3400
4.5	Overall height with mast raised	h4	mm	4370	4370	4370	4370	4370
4.7	Height to top of overhead guard	h6	mm	2420	2420	2420	2420	2420
4.8	Seat height	h7	mm	1330	1330	1330	1330	1330
4.12	Tow coupling height	h10	mm	465	465	465	465	465
4.19	Overall length	l1	mm	4550	4550	4550	4550	4550
4.20	Length to fork face (includes fork thickness)	l2	mm	3300	3300	3300	3300	3300
4.21	Overall width	b1/b2	mm	1660 / 1830	1661 / 1830	1662 / 1830	1663 / 1830	1664 / 1830
4.22	Fork dimensions (thickness, width, length)	s / e / l	mm	150×60×1200	150×60×1200	150×60×1200	150×60×1200	150×60×1200
4.23	Fork carriage iso 2328/30, FEM/A,B			4A	4A	4A	4A	4A
4.24	Fork carriage width	b3	mm	1300	1300	1300	1300	1300
4.31	Ground clearance under mast, with load	m1	mm	180	180	180	180	180
4.32	Ground clearance at center of wheelbase, with load (forks lowered)	m2	mm	165	165	165	165	165
4.33	Working aisle width with 1000 x 1200 mm pallets, crosswise	Ast	mm	4835	4610	4835	4610	4835
4.34b	Working aisle width with 800 x 1200 mm pallets, lengthwise	Ast	mm	5035	4745	5035	4745	5035
4.35	Turning circle radius	Wa	mm	2985	2650	2985	2650	2985
4.36	Minimum distance between centers of rotation	b13	mm	950	-	950	-	950
	PERFORMANCE							
5.1	Travel speed, with / without load		km/h	15 / 15	20 / 20	15 / 15	20 / 20	14.5 / 15
5.2	Lifting speed, with / without load		m/s	0.24 / 0.39	0.24 / 0.40	0.24 / 0.41	0.24 / 0.42	0.22 / 0.39
5.3	Lowering speed, with / without load		m/s	0.5 / 0.4	0.39 / 0.45	0.5 / 0.6	0.37 / 0.45	0.5 / 0.8
5.5	Rated drawbar pull, with / without load		N	6900 / 7500	6900 / 7500	6900 / 7500	6900 / 7500	6600 / 7300
5.6	Maximum drawbar pull, with / without load (5 min short duty)		N	16400 / 17000	23800 / 24400	16400 / 17000	23700 / 24300	16100 / 16800
5.7	Gradeability, with / without load		%	6.5 / 11	8.2 / 13.5	6.5 / 11	7.9 / 12.8	5.5 / 10
5.8	Maximum gradeability, with / without load		%	10 / 16	14.7 / 23.7	10 / 16	14.2 / 22.5	8.5 / 14
5.9	Acceleration time (10 metres) with / without load		s	5.8 / 5.4	6.6 / 5.3	5.8 / 5.4	6.6 / 5.3	6.1 / 5.7
5.10	Service brakes (mechanical / hydraulic / electric / pneumatic)			Electric	Hydraulic / Electric	Electric	Hydraulic / Electric	Electric
	ELECTRIC MOTORS							
6.1	Drive motor capacity (60 min. short duty)		kW	2 ×15	2 ×15	2 ×15	2 ×15	2 ×15
6.2	Lift motor output at 15% duty factor		kW	30	30	30	30	30
6.4	Battery voltage		V/Ah	96	96	96	96	96
6.5	Battery weight (including container)		kg	3350	3350	3350	3350	3350
6.6a	Energy consumption according to DIN EN 16796		kWh / h	-	-	-	-	-
	MISCELLANEOUS							
8.1	Type of drive control			Inverter	Inverter	Inverter	Inverter	Inverter
10.1	Maximum operating pressure for attachments		bar	200	200	200	200	200
10.2	Oil flow for attachments		l/min	-	-	-	-	-
10.7	Noise level, value at operator's ear (EN 12053)		dB(A)	-	-	-	-	-
10.8	Towing coupling design / DIN type, ref.			72	72	72	72	72

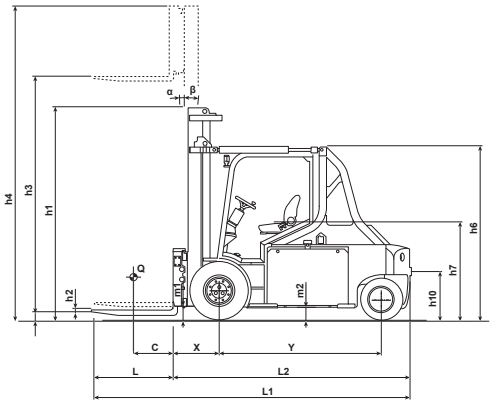

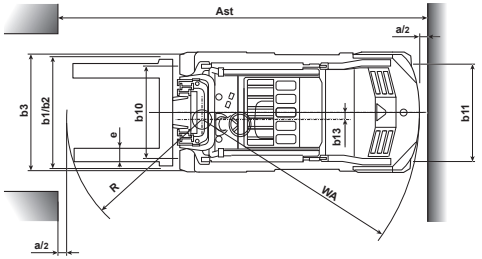

Ast = Wa + R + a
Ast = Working aisle width with load
Wa = Turning radius
a = Safety clearance = 2 x 100 mm
R = $\sqrt{(l6 + x)^2 + (b12 / 2 - b13)^2}$
b12 = Pallet width (1200 mm)

VDI - PERFORMANCE & DIMENSIONS

FB60-120N(H) Series

ELECTRIC COUNTERBALANCE

7.0 – 8.0 tonnes

	CHARACTERISTICS			Mitsubishi Forklift Trucks				
1.1	Manufacturer (abbreviation)							
1.2	Manufacturer's model designation			**FB70NH**	**FB80N**	**FB80NH**	**FB80N-900**	**FB80NH-900**
1.3	Power source: (battery, diesel, LP gas, petrol)			Battery	Battery	Battery	Battery	Battery
1.4	Operator type: pedestrian, (operator)-standing, -seated			Seated	Seated	Seated	Seated	Seated
1.5	Load capacity	Q	kg	7000	8000	8000	8000	8000
1.6	Load center distance	c	mm	600	600	600	900	900
1.8	Load distance, axle to fork face	x	mm	650	700	700	700	700
1.9	Wheelbase	y	mm	2250	2550	2550	2550	2630
	WEIGHT							
2.1	Truck weight, without load / including battery (simplex mast, lowest lift height)		kg	10770	12095	12095	12095	14175
2.2	Axle loading with maximum load, front / rear (simplex mast, lowest lift height)		kg	16124 / 1646	18670 / 1425	18670 / 1425	18670 / 1425	20356 /1819
2.3	Axle loading without load, front / rear (simplex mast, lowest lift height)		kg	5240 / 5530	6590 / 5505	6590 / 5505	6590 / 5505	7490 / 6685
	WHEELS, DRIVE TRAIN							
3.1	Tyres: V=solid, L=pneumatic, SE=solid pneumatic - front / rear			SE	SE	SE	SE	SE
3.2	Tyre dimensions, front			8.25-15	8.25-15	8.25-15	8.25-15	8.25-15
3.3	Tyre dimensions, rear			22 ×9-16 23 ×10-12	22 ×9-16 23 ×10-12	22 ×9-16 23 ×10-12	315 / 45-12	315 / 45-12
3.5	Number of wheels, front / rear (x=driven)			2 ×/2	2 ×/2	2 ×/2	4 ×/2	4 ×/2
3.6	Truck width (center of tyres), front	b10	mm	1310 1375 1380	1311 1375 1380	1312 1375 1380	1460	1460
3.7	Truck width (center of tyres), rear	b11	mm	1225 1225	1226 1225	1227 1225	1215	1215
	DIMENSIONS							
4.1	Mast tilt, forwards / backwards	α/β	°	5.5/6(2)	5.5/6(2)	5.5/6(2)	5.5/6(2)	5.5/6(2)
4.2	Height with mast lowered	h1	mm	2680	2792	2792	2900	2900
4.3	Free lift	h2	mm	100	0	0	0	0
4.4	Lift height	h3	mm	3400	3400	3400	3400	3400
4.5	Overall height with mast raised	h4	mm	4370	4530	4530	4800	4800
4.7	Height to top of overhead guard	h6	mm	2420	2420	2420	2420	2420
4.8	Seat height	h7	mm	1330	1330	1330	1330	1330
4.12	Tow coupling height	h10	mm	465	465	465	465	465
4.19	Overall length	l1	mm	4550	4840	4840	5340	5340
4.20	Length to fork face (includes fork thickness)	l2	mm	3300	3640	3640	3740	3740
4.21	Overall width	b1/b2	mm	1665 / 1830	1666 / 1830	1667 / 1830	1900	1900
4.22	Fork dimensions (thickness, width, length)	s / e / l	mm	150 × 60 ×1200	200 × 60 ×1200	200 × 60 ×1200	200 × 60 ×1200	200 × 70 ×1600
4.23	Fork carriage iso 2328/30, FEM/A,B			4A	4A	4A	4A	4A
4.24	Fork carriage width	b3	mm	1300	1300	1300	1800	1800
4.31	Ground clearance under mast, with load	m1	mm	180	180	180	180	180
4.32	Ground clearance at center of wheelbase, with load (forks lowered)	m2	mm	165	165	165	165	165
4.33	Working aisle width with 1000 x 1200 mm pallets, crosswise	Ast	mm	4610	5200	4955	5350	4955
4.34b	Working aisle width with 800 x 1200 mm pallets, lengthwise	Ast	mm	4745	5400	5095	5550	5095
4.35	Turning circle radius	Wa	mm	2650	3300	2950	3450	2950
4.36	Minimum distance between centers of rotation	b13	mm	-	1050	-	1050	1150
	PERFORMANCE							
5.1	Travel speed, with / without load		km/h	20 / 20	14 / 15	19 / 20	14 / 15	17 / 18
5.2	Lifting speed, with / without load		m/s	0.22 / 0.39	0.2 / 0.34	0.2 / 0.35	0.21 / 0.3	0.3 / 0.44
5.3	Lowering speed, with / without load		m/s	0.35 / 0.45	0.45 / 0.35	0.31 / 0.45	0.45 / 0.37	0.5 / 0.4
5.5	Rated drawbar pull, with / without load		N	6600 / 7300	6400 / 7200	6400 / 7200	5600 / 6300	5600 / 6300
5.6	Maximum drawbar pull, with / without load (5 min short duty)		N	23600 / 24300	15900 / 16700	23300 / 24400	20700 / 21500	20700 / 21500
5.7	Gradeability, with / without load		%	7.4 / 12.8	5 / 9.5	6.4 / 11.1	5 / 9.5	5 / 9
5.8	Maximum gradeability, with / without load		%	13.4 / 22.5	8 / 13.5	11.6 / 19.6	9 / 15	9.2 / 16
5.9	Acceleration time (10 metres) with / without load		s	7 / 5.5	6.2 / 5.8	7.4 / 5.6	6.5 / 5	7 / 5.2
5.10	Service brakes (mechanical / hydraulic / electric / pneumatic)			Hydraulic / Electric	Electric	Hydraulic / Electric	Hydraulic / Electric	Electric
	ELECTRIC MOTORS							
6.1	Drive motor capacity (60 min. short duty)		kW	2 ×15	2 ×15	2 ×15	2 ×15	2 ×15
6.2	Lift motor output at 15% duty factor		kW	30	30	45	45	45
6.4	Battery voltage		V/Ah	96	96	96	96	96
6.5	Battery weight (including container)		kg	3350	4300	4300	4300	4300
6.6a	Energy consumption according to DIN EN 16796		kWh / h	-	-	-	-	-
	MISCELLANEOUS							
8.1	Type of drive control			Inverter	Inverter	Inverter	Inverter	Inverter
10.1	Maximum operating pressure for attachments		bar	200	200	200	200	200
10.2	Oil flow for attachments		l/min	-	-	-	-	-
10.7	Noise level, value at operator's ear (EN 12053)		dB(A)	-	-	-	-	-
10.8	Towing coupling design / DIN type, ref.			72	72	72	72	72

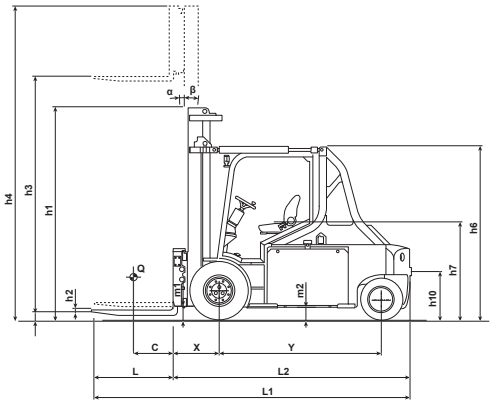

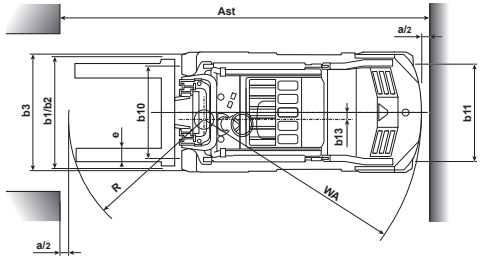

Ast = Wa + R + a
Ast = Working aisle width with load
Wa = Turning radius
a = Safety clearance = 2 x 100 mm
R = $\sqrt{(l6 + x)^2 + (b12 / 2 - b13)^2}$
b12 = Pallet width (1200 mm)

VDI - PERFORMANCE & DIMENSIONS

FB60-120N(H) Series

ELECTRIC COUNTERBALANCE

9.0 – 12.0 tonnes

	CHARACTERISTICS			Mitsubishi Forklift Trucks				
				FB90N	**FB90NH**	**FB100N**	**FB100NH**	**FB120NH**
1.1	Manufacturer (abbreviation)			Battery	Battery	Battery	Battery	Battery
1.2	Manufacturer's model designation			Seated	Seated	Seated	Seated	Seated
1.3	Power source: (battery, diesel, LP gas, petrol)							
1.4	Operator type: pedestrian, (operator)-standing, -seated							
1.5	Load capacity	Q	kg	9000	9000	10000	10000	12000
1.6	Load center distance	c	mm	600	600	600	600	600
1.8	Load distance, axle to fork face	x	mm	720	720	720	720	730
1.9	Wheelbase	y	mm	2550	2550	2630	2630	2980
	WEIGHT							
2.1	Truck weight, without load / including battery (simplex mast, lowest lift height)		kg	13425	13425	14175	14425	16105
2.2	Axle loading with maximum load, front / rear (simplex mast, lowest lift height)		kg	20780 / 1645	20780 / 1645	20356 / 1819	22678 / 1747	26199 / 1906
2.3	Axle loading without load, front / rear (simplex mast, lowest lift height)		kg	7120 / 6305	7120 / 6305	7490 / 6685	7660 / 6765	8840 / 7265
	WHEELS, DRIVE TRAIN							
3.1	Tyres: V=solid, L=pneumatic, SE=solid pneumatic - front / rear			SE	SE	SE	SE	SE
3.2	Tyre dimensions, front			8.25-15	8.25-15	300-15	300 - 15	355 / 65-15
3.3	Tyre dimensions, rear			23 ×10-12	23 ×10-12	315 / 45-12	315 / 45-12	315 / 45-12
3.5	Number of wheels, front / rear (x=driven)			4 ×/2	4 ×/2	4 ×/2	4 ×/2	4 ×/2
3.6	Truck width (center of tyres), front	b10	mm	1380	1380	1460	1460	1565
3.7	Truck width (center of tyres), rear	b11	mm	1225	1225	1215	1215	1215
	DIMENSIONS							
4.1	Mast tilt, forwards / backwards	α / β	°	5.5/6(2)	5.5/6(2)	5.5/6(2)	5.5/6(2)	5.5/6(2)
4.2	Height with mast lowered	h1	mm	2900	2900	2950	2950	2950
4.3	Free lift	h2	mm	0	0	0	0	0
4.4	Lift height	h3	mm	3400	3400	3400	3400	3400
4.5	Overall height with mast raised	h4	mm	4800	4800	4850	4850	4900
4.7	Height to top of overhead guard	h6	mm	2420	2420	2420	2420	2420
4.8	Seat height	h7	mm	1330	1330	1330	1330	1330
4.12	Tow coupling height	h10	mm	465	465	465	465	465
4.19	Overall length	l1	mm	4880	4880	4960	4960	5325
4.20	Length to fork face (includes fork thickness)	l2	mm	3680	3680	3760	3760	4125
4.21	Overall width	b1/b2	mm	1830	1830	2000	2000	2140
4.22	Fork dimensions (thickness, width, length)	s / e / l	mm	200 × 60 ×1200	200 × 60 ×1200	200 × 60 ×1200	200 × 60 ×1200	200 × 70 ×1200
4.23	Fork carriage iso 2328/30, FEM/A,B			5A	5A	5A	5A	HD1 [2]
4.24	Fork carriage width	b3	mm	1500	1500	1800	1800	2000
4.31	Ground clearance under mast, with load	m1	mm	180	180	180	180	180
4.32	Ground clearance at center of wheelbase, with load (forks lowered)	m2	mm	165	165	165	165	165
4.33	Working aisle width with 1000 x 1200 mm pallets, crosswise	Ast	mm	5220	4975	5420	5420	5705
4.34b	Working aisle width with 800 x 1200 mm pallets, lengthwise	Ast	mm	5420	5115	5420	5420	5905
4.35	Turning circle radius	Wa	mm	3300	2950	3500	3500	3705
4.36	Minimum distance between centers of rotation	b13	mm	1050	1050	1250	1250	1250
	PERFORMANCE							
5.1	Travel speed, with / without load		km/h	15 / 18	18 / 19	14 / 15	16 / 18	16 / 17
5.2	Lifting speed, with / without load		m/s	0.28 / 0.4	0.28 / 0.4	0.18 / 0.27	0.22 / 032	0.28 / 0.36
5.3	Lowering speed, with / without load		m/s	0.47 / 0.39	0.28 / 0.4	0.5 /0.4	0.5 / 0.4	0.47 / 0.38
5.5	Rated drawbar pull, with / without load		N	6100 / 6850	6100 / 6850	5000 / 5600	5000 / 5650	5400 / 6800
5.6	Maximum drawbar pull, with / without load (5 min short duty)		N	15150 / 15900	23000 / 23900	18500 / 19000	18600 / 19350	22900 / 23700
5.7	Gradeability, with / without load		%	4.7 / 9	5.6 / 10	4 / 8	4.5 / 8	4.8 / 8.8
5.8	Maximum gradeability, with / without load		%	7.7 / 12.7	10.3 / 17.8	8 / 14	8.3 / 14.5	8.7.2015
5.9	Acceleration time (10 metres) with / without load		s	5.8 / 5.4	7.8 / 5.8	6 / 4	6.2 / 4.7	9.6 / 6.9
5.10	Service brakes (mechanical / hydraulic / electric / pneumatic)			Electric	Hydraulic / Electric	Hydraulic / Electric	Electric	Electric
	ELECTRIC MOTORS							
6.1	Drive motor capacity (60 min. short duty)		kW	2 ×15	2 ×15	2 ×15	2 ×15	2 ×15
6.2	Lift motor output at 15% duty factor		kW	45	45	45	45	45
6.4	Battery voltage		V/Ah	96	96	96	96	96
6.5	Battery weight (including container)		kg	4300	4300	4300	4300	
6.6a	Energy consumption according to DIN EN 16796		kWh / h	-	-	-	-	-
	MISCELLANEOUS							
8.1	Type of drive control			Inverter	Inverter	Inverter	Inverter	Inverter
10.1	Maximum operating pressure for attachments		bar	200	200	200	200	200
10.2	Oil flow for attachments		l/min	-	-	-	-	-
10.7	Noise level, value at operator's ear (EN 12053)		dB(A)	-	-	-	-	-
10.8	Towing coupling design / DIN type, ref.			72	72	72	72	72

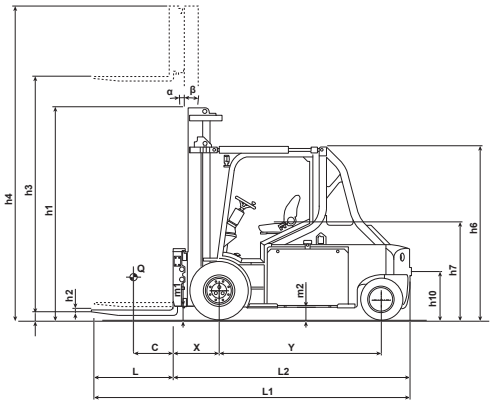

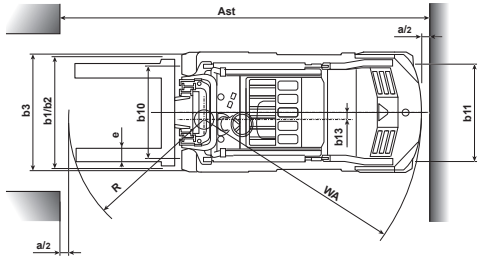

Ast = Wa + R + a
Ast = Working aisle width with load
Wa = Turning radius
a = Safety clearance = 2 x 100 mm
R = $\sqrt{(l6 + x)^2 + (b12 / 2 - b13)^2}$
b12 = Pallet width (1200 mm)

MAST PERFORMANCE AND CAPACITY

FB60-120N(H) Series

ELECTRIC COUNTERBALANCE

MAST TYPE	Max. fork height mm	FB60N(H)						FB65N(H)					
		Sideshift			Side shifting fork positioner			Sideshift			Side shifting fork positioner		
		Load Capacity (kgs) @ load centre (mm)											
		600	900	1200	600	900	1200	600	900	1200	600	900	1200
SIMPLEX	3400	6000	5200	4000	5800	5000	4000	6500	5300	4000	6300	5100	4000
	3800	6000	5150	4000	5800	4950	3950	6500	5300	4000	6300	5100	4000
	4200	6000	5000	4000	5800	4800	3850	6300	5150	4000	6100	4950	4000
	4500	5900	4850	4000	5700	4650	3750	6100	5000	4000	5900	4800	3900
	5500	5500	4500	3800	5300	4300	3550	5700	4700	4000	5500	4500	3800
DUPLEX AND TRIPLEX	4380	6000	5000	4000	5800	4800	3900	6200	5200	4000	6000	5000	4000
	5300	5500	4600	3850	5300	4400	3650	5650	4800	4000	5450	4600	3950
	5500	5400	4500	3800	5200	4300	3550	5600	4750	4000	5400	4550	3850
	5700	5300	4400	3750	5100	4200	3500	5500	4650	4000	5300	4450	3750
	6100	5200	4300	3650	5000	4100	3400	5350	4500	3800	5150	4300	3600

MAST TYPE	Max. fork height mm	FB70N(H)						FB80N(H)					
		Sideshift			Side shifting fork positioner			Sideshift			Side shifting fork positioner		
		Load Capacity (kgs) @ load centre (mm)											
		600	900	1200	600	900	1200	600	900	1200	600	900	1200
SIMPLEX	3400	7000	5300	4000	6800	5300	4000	8000	6300	5100	7800	6100	4900
	3800	6850	5300	4000	6650	5300	4000	7700	6200	5050	7500	6000	4850
	4200	6700	5300	4000	6500	5300	4000	7400	6000	5050	7200	5800	4850
	4500	6500	5300	4000	6300	5150	4000	7100	5750	4900	6900	5550	4700
	5500	6100	4900	4000	5900	4700	4000	6700	5500	4700	6500	5300	4500
DUPLEX AND TRIPLEX	4380	6550	5300	4000	6350	5100	4000	7000	5800	4900	6800	5600	4700
	5300	6150	5100	4000	5950	4900	4000	6600	5600	4700	6400	5400	4500
	5500	6100	5000	4000	5900	4800	4000	6500	5450	4600	6300	5250	4400
	5700	6000	4900	4000	5800	4700	3950	6400	5300	4500	6200	5100	4300
	6100	5800	4700	4000	5600	4500	3800	6200	5100	4300	6000	4900	4100

MAST TYPE	Max. fork height mm	FB80-900N(H)						FB90N(H)					
		Sideshift			Side shifting fork positioner			Sideshift			Side shifting fork positioner		
		Load Capacity (kgs) @ load centre (mm)											
		600	900	1200	600	900	1200	600	900	1200	600	900	1200
SIMPLEX	3400	8000	8000	6500	8000	8000	6500	9000	7200	5600	8800	7000	5600
	3800	8000	7800	6500	8000	7600	6300	8600	7100	5600	8400	6900	5600
	4200	8000	7700	6500	8000	7500	6300	8500	7000	5600	8300	6800	5500
	4600	8000	7600	6400	8000	7400	6200	8200	6800	5600	8000	6600	5500
	5500	8000	7200	6000	8000	7000	5800	7700	6400	5300	7500	6200	5100
DUPLEX AND TRIPLEX	3690	8000	7700	6500	8000	7500	6300	8100	6700	5500	7900	6500	5300
	5100	8000	7100	6050	8000	6900	5850	7300	6100	5100	7100	5900	4900
	5250	8000	7000	5950	8000	6800	5750	7150	6000	5000	6950	5800	4800
	5500	8000	6850	5800	7800	6650	5600	7000	5850	4850	6800	5650	4650
	5700	8000	6750	5700	7800	6550	5500	6800	5700	4700	6600	5500	4500

MAST TYPE	Max. fork height mm	FB100N(H)					
		Sideshift			Side shifting fork positioner		
		Load Capacity (kgs) @ load centre (mm)					
		600	900	1200	600	900	1200
SIMPLEX	3400	10000	7450	5600	9800	7450	5600
	3800	9700	7450	5600	9500	7450	5600
	4200	9400	7450	5600	9200	7450	5600
	4500	9200	7450	5600	9000	7400	5600
	5500	8700	7200	5600	8500	7000	5600
DUPLEX AND TRIPLEX	3730	8900	7400	5600	8700	7200	5600
	5100	8000	6700	5600	7800	6500	5500
	5300	7750	6550	5600	7550	6350	5400
	5500	7600	6400	5500	7400	6200	5300
	5700	7500	6300	5400	7300	6100	5200

FB120NH Information not available at time of publication. Please consult with your distributor representative for further details.

BATTERY DIMENSIONS		FB60N	FB60NH	FB65N	FB65NH	FB70N	FB70NH	FB80N	FB80NH	FB80N-900	FB80NH-900	FB90N	FB90NH	FB100N	FB100NH	FB120NH
Battery voltage	V	96	96	96	96	96	96	96	96	96	96	96	96	96	96	96
Capacity at a 5-hour discharge	Ah	1085	1085	1085	1085	1085	1085	1395	1395	1395	1395	1395	1395	1395	1395	1550
Battery weight, min.	kg	3050	3050	3050	3050	3050	3050	4050	4050	4050	4050	4050	4050	4050	4050	4630
Battery weight, max.*	kg	3350	3350	3350	3350	3350	3350	4300	4300	4300	4300	4300	4300	4300	4300	4700

* including battery container

STANDARD EQUIPMENT & OPTIONS

FB60-120N(H) Series

ELECTRIC COUNTERBALANCE

● = Standard
● = Option

	FB60N	FB60NH	FB65N	FB65NH	FB70N	FB70NH	FB80N	FB80NH	FB80N-900	FB80NH-900	FB90N	FB90NH	FB100N	FB100NH	FB120NH
GENERAL															
4-wheel chassis, 96 volts	●	●	●	●	●	●	●	●	●	●	●	●	●	●	●
Low overhead guard for container applications	●	●	●	●	●	●	●	●	●	●	●	●	●	●	●
Key pre-set economy or high performance mode (ECO / PRO)	●	●	●	●	●	●	●	●	●	●	●	●	●	●	●
Variable hydraulic speed control functions	●	●	●	●	●	●	●	●	●	●	●	●	●	●	●
Intelligent curve control	●	●	●	●	●	●	●	●	●	●	●	●	●	●	●
Sensorized safety seat belt	●	●	●	●	●	●	●	●	●	●	●	●	●	●	●
CE name plates -language markings	●	●	●	●	●	●	●	●	●	●	●	●	●	●	●
Operations and Maintenance Manual	●	●	●	●	●	●	●	●	●	●	●	●	●	●	●
POWER SOURCE															
Lead acid battery	●	●	●	●	●	●	●	●	●	●	●	●	●	●	●
FRAME															
Battery tray	●	●	●	●	●	●	●	●	●	●	●	●	●	●	●
Quick and easy battery lateral replacement	●	●	●	●	●	●	●	●	●	●	●	●	●	●	●
LIGHTING															
LED work lights	●	●	●	●	●	●	●	●	●	●	●	●	●	●	●
Amber strobe	●	●	●	●	●	●	●	●	●	●	●	●	●	●	●
"Blue point" rear light	●	●	●	●	●	●	●	●	●	●	●	●	●	●	●
"Blue point" rear light mounted low	●	●	●	●	●	●	●	●	●	●	●	●	●	●	●
ELECTRICAL SYSTEM															
Forward / reverse drive direction selection with double pedal system	●	●	●	●	●	●	●	●	●	●	●	●	●	●	●
Drive direction lever in steering column (forward–neutral–reverse)	●	●	●	●	●	●	●	●	●	●	●	●	●	●	●
Road light kit	●	●	●	●	●	●	●	●	●	●	●	●	●	●	●
PIN code access with start switch	●	●	●	●	●	●	●	●	●	●	●	●	●	●	●
Load weight indicator	●	●	●	●	●	●	●	●	●	●	●	●	●	●	●
OPERATOR'S CABIN															
Air conditioner	●	●	●	●	●	●	●	●	●	●	●	●	●	●	●
Heater	●	●	●	●	●	●	●	●	●	●	●	●	●	●	●
Multifunctional interactive full colour display	●	●	●	●	●	●	●	●	●	●	●	●	●	●	●
Rear view camera	●	●	●	●	●	●	●	●	●	●	●	●	●	●	●
Tiltable steering column	●	●	●	●	●	●	●	●	●	●	●	●	●	●	●
Fingertip control armrest	●	●	●	●	●	●	●	●	●	●	●	●	●	●	●
Manual control levers	●	–	●	–	●	●	●	–	●	–	●	–	●	–	–
Full-suspension vinyl Grammer MSG85 seat	●	●	●	●	●	●	●	●	●	●	●	●	●	●	●
ACCESSORIES															
Rear view mirror	●	●	●	●	●	●	●	●	●	●	●	●	●	●	●
External rear view mirror	●	●	●	●	●	●	●	●	●	●	●	●	●	●	●
Additional Camera	●	●	●	●	●	●	●	●	●	●	●	●	●	●	●



Low overhead guard for container applications.



LED work lights



Multifunctional interactive full colour display



Front screen and roof with wiper / washer

STANDARD EQUIPMENT & OPTIONS

FB60-120N(H) Series

ELECTRIC COUNTERBALANCE

● = Standard
● = Option

	FB60N	FB60NH	FB65N	FB65NH	FB70N	FB70NH	FB80N	FB80NH	FB80N-900	FB80NH-900	FB90N	FB90NH	FB100N	FB100NH	FB120NH
CABIN															
Default OHG	●	●	●	●	●	●	●	●	●	●	●	●	●	●	●
Front screen and roof with wiper / washer	●	●	●	●	●	●	●	●	●	●	●	●	●	●	●
Low front screen and roof with wiper / washer	●	●	●	●	●	●	●	●	●	●	●	●	●	●	●
Heating element rear screen	●	●	●	●	●	●	●	●	●	●	●	●	●	●	●
Heating element front screen	●	●	●	●	●	●	●	●	●	●	●	●	●	●	●
Air conditioner	●	●	●	●	●	●	●	●	●	●	●	●	●	●	●
Plexi roof	●	●	●	●	●	●	●	●	●	●	●	●	●	●	●
PVC doors	●	●	●	●	●	●	●	●	●	●	●	●	●	●	●
Full cabin	●	●	●	●	●	●	●	●	●	●	●	●	●	●	●
EXTERIOR															
Special colour (RAL) for the frame and counterweight	●	●	●	●	●	●	●	●	●	●	●	●	●	●	●
FORKS & CARRIAGE															
Various fork lengths (1200 - 2400mm)	●	●	●	●	●	●	●	●	●	●	●	●	●	●	●
LOAD BACKREST															
Integrated side shifter	●	●	●	●	●	●	●	●	●	●	●	●	●	●	●
Fork positioner+ integrated side shifter	●	●	●	●	●	●	●	●	●	●	●	●	●	●	●
Fork carriage with 8 rollers	●	●	●	●	●	●	●	●	●	●	●	●	●	●	●
HYDRAULIC SYSTEM															
3/4/5-way valve armrest-mounted fingertip control	●	●	●	●	●	●	●	●	●	●	●	●	●	●	●
3/4-way valve manual control	●	●	●	●	●	●	●	●	●	●	●	●	●	●	●
Double action FC 3 v, for clamp usage	●	●	●	●	●	●	●	●	●	●	●	●	●	●	●
Double action FC 4 v, for clamp usage	●	●	●	●	●	●	●	●	●	●	●	●	●	●	●
Double action MC 3 v, for clamp usage	●	●	●	●	●	●	●	●	●	●	●	●	●	●	●
Double action MC 4 v, for clamp usage	●	●	●	●	●	●	●	●	●	●	●	●	●	●	●
Hydraulic accumulator	●	●	●	●	●	●	●	●	●	●	●	●	●	●	●
3-way piping	●	●	●	●	●	●	●	●	●	●	●	●	●	●	●
4-way piping	●	●	●	●	●	●	●	●	●	●	●	●	●	●	●
TYRES															
Super Elastic tires	●	●	●	●	●	●	●	●	–	–	–	–	–	–	–
Non-marking super elastic	●	●	●	●	●	●	●	●	–	–	–	–	–	–	–
Dual super elastic	●	●	●	●	●	●	●	●	●	●	●	●	●	●	●
Non-marking Solid Tyres	●	●	●	●	●	●	●	●	●	●	●	●	●	●	●
Cushion tyres	●	●	●	●	●	●	●	●	●	●	●	●	●	●	●
Non-marking cushion tires	●	●	●	●	●	●	●	●	●	●	●	●	●	●	●

WHEN RELIABILITY IS EVERYTHING...



Like any product bearing the Mitsubishi Forklift Trucks name, our materials handling equipment benefits from the tremendous heritage, huge resources and cutting-edge technology of one of the world's largest corporations – Mitsubishi Heavy Industries Group.

Engineering spacecraft, jet planes, power plants and more, MHI specialises in those technologies where performance, dependability and superiority decide your success or failure...

So when we promise you quality, reliability and value for money, you know it's a guarantee we have the power to deliver.

That's why every model in our award winning and comprehensive range of lift trucks and warehouse equipment is built to a high specification – to ensure it keeps working for you. Day after day. Year after year. Whatever the job. Whatever the conditions.

YOU'LL NEVER WORK ALONE

As your local authorised distributor, we are here to keep your trucks working – through our extensive experience, our technical excellence and our commitment to customer care.

We are your local experts, backed by efficient channels to the entire organisation of Mitsubishi Forklift Trucks.

No matter where you are, we are close by – with the capability to meet your needs.

Discover how Mitsubishi Forklift Trucks give you more from your local authorised dealer or when you visit our website www.mitforklift.com

Performance specifications may vary depending on standard manufacturing tolerances, vehicle condition, types of tyres, floor or surface conditions, applications or operating environment. Trucks may be shown with non-standard options.

Specific performance requirements and locally available configurations should be discussed with your distributor.

We follow a policy of continual product improvement. For this reason, some materials, options and specifications could change without notice.

QUALITY | RELIABILITY | VALUE FOR MONEY

info@mitforklift.com

CESM2387 (10/23) © 2023 MLE











Mitsubishi Logisnext Europe B.V.
Hefbrugweg 77, 1332 AM Almere
The Netherlands
Tel: +31 (0)36 5494 411

mft2.eu/fb

mft2.eu/apps

mft2.eu/youtube

mft2.eu/facebook

MITSUBISHI FORKLIFT TRUCKS