


V2212.02

Let's grow together

# EFL253/303/353(S)

## Li-ion counterbalance forklift

## 2.5/3.0/3.5T LI-ION TECHNOLOGY

- Higher performance for productivity boost
- The truck structure integrates aesthetics and practical design
- Ergonomic improvements for comfortable operation
- Optimized overhead guard for usage of a full cabin
- Lithium technology to replace internal combustion engine

**EP EQUIPMENT CO.,LTD**
www.ep-ep.com

CE

# FEATURE

## Higher performance for productivity boost

Max travel speed 16/17km/h to cover diverse intralogistics application needs.
Max battery capacity 80V/460Ah and max charging current 200A for longer uptime and fast charging.
Max gradeability 20/25% to deliver better stability on ramps.
Max lifting speed 0.4/0.5m/s for greater efficiency.

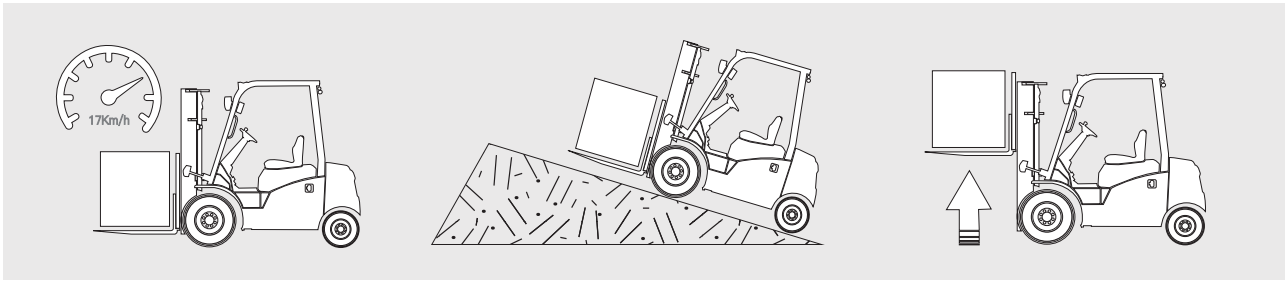





## The truck structure integrates aesthetics and practical design

Both practicality and beauty are reflected in the design of the new EFL series. It inherits the robust chassis of the T8 IC truck series and features a more streamlined and compact counterweight, to better fit in confined space. Plus, the rain-proofed charging port protects the port from water splash and ensures charging safety.




## Lithium technology to replace internal combustion engine

The lithium technology has proven itself as an emission-free and maintenance-free alternative to diesel. The new generation of EFL series handles loads with consistently high performance due to opportunity charging even for the most demanding applications.



## Multi-functions for safe operation and easy fleet management

The new EFL series is equipped with a variety of functional configurations, such as OPS system, Telematics and card system, which not only takes security as priority but also reinforce easier fleet management.

OPS system

Card system (option)

Telematics

## Ergonomic improvements for comfortable operation

The workspace of the new EFL series is more spacious with a simplified panel and a comfortable pedal. The series features a new LCD display that clearly shows speed, working hours, battery status ,milage and parking status so the operator can easily grapse the truck conditions just with a glance.



New LCD display




Spacious legroom

## Optimized overhead guard for usage of a full cabin

The brand new overhead guard is bolted, instead of welded, to the truck frame and this is more suitable for usage of a full cabin to cope with all weathers. For flexible strategy, it is easy to install or detach a cabin across different trucks.



# Li-ion counterbalance forklift 2.5/3.0/3.5T

# EFL253/303/353

| | | | | | | | |
|---|---|---|---|---|---|---|---|
| Distinguishing mark | 1.1 | Manufacturer | | | EP | EP | EP |
| | 1.2 | Model designation | | | EFL253 | EFL303 | EFL353 |
| | 1.3 | Drive | | | Electric | Electric | Electric |
| | 1.4 | Operator type | | | Seated | Seated | Seated |
| | 1.5 | Load capacity | Q | kg | 2500 | 3000 | 3500 |
| | 1.6 | Load center distance | c | mm | 500 | 500 | 500 |
| | 1.8 | Load distance，centre of drive axle to fork | x | mm | 495 | 481 | 486 |
| | 1.9 | Wheelbase | y | mm | 1740 | 1740 | 1740 |
| Service weight | 2.1 | Service weight | | kg | 3780 | 4280 | 4570 |
| | 2.2 | Axle loading, laden front/rear | | kg | 5720/560 | 6595/685 | 7415/655 |
| | 2.3 | Axle loading, unladen front/rear | | kg | 1805/1990 | 1900/2380 | 1930/2640 |
| Tyres/chassis | 3.1 | Tyre type | | | Solid rubber | Solid rubber | Solid rubber |
| | 3.2 | Tyre size, front | | | 7.00-12 | 28X9-15 | 28X9-15 |
| | 3.3 | Tyre size, rear | | | 18X7-8 | 18x7-8 | 18X7-8 |
| | 3.5 | Wheels, number front/rear (x=drive wheels) | | mm | 2x/ 2 | 2x/ 2 | 2x/ 2 |
| | 3.6 | Tread width, front | b10 | mm | 975 | 1010 | 1010 |
| | 3.7 | Tread width, rear | b11 | mm | 955 | 955 | 955 |
| Dimensions | 4.1 | Tilt of mast/fork carriage forward/backward | α/β | ° | 6/ 10 | 6/ 10 | 6/ 10 |
| | 4.2 | Retracted mast height | h1 | mm | 2090 | 2070 | 2070 |
| | 4.3 | Free lift | h2 | mm | 120 | 135 | 135 |
| | 4.4 | Lift height | h3 | mm | 3000 | 3000 | 3000 |
| | 4.5 | Height, mast extended | h4 | mm | 4025 | 4095 | 4095 |
| | 4.7 | Height of overhead guard (cabin) | h6 | mm | 2165 | 2180 | 2180 |
| | 4.8 | Seat height/standing height | h7 | mm | 1095 | 1110 | 1110 |
| | 4.12 | Tow coupling height | h10 | mm | 330 | 345 | 345 |
| | 4.19 | Overall length | l1 | mm | 3600 | 3610 | 3688 |
| | 4.20 | Length to face of forks | l2 | mm | 2530 | 2540 | 2618 |
| | 4.21 | Overall width | b1/b2 | mm | 1054 | 1210 | 1210 |
| | 4.22 | Fork dimensions | s/e/l | mm | 40×122×1070 | 45×122×1070 | 50×122×1070 |
| | 4.23 | A,B Fork carriage class/type A, B | | | 2A | 3A | 3A |
| | 4.24 | Fork carriage width | b3 | mm | 1040 | 1100 | 1100 |
| | 4.31 | Ground clearance, laden, below mast | m1 | mm | 125 | 130 | 130 |
| | 4.32 | Ground clearance, center of wheelbase | m2 | mm | 170 | 185 | 185 |
| | 4.34.1 | Aisle width for pallets 1000×1200 crossways | Ast | mm | 4000 | 4028 | 4091 |
| | 4.34.2 | Aisle width for pallets 800×1200 lengthways | Ast | mm | 4200 | 4228 | 4291 |
| | 4.35 | Turning radius | Wa | mm | 2305 | 2347 | 2405 |
| Performance data | 5.1 | Travel speed, laden/unladen | | km/h | 11/12 | 11/12 | 11/12 |
| | 5.2 | Lifting speed, laden/unladen | | m/s | 0.29/0.36 | 0.29/0.36 | 0.28/0.36 |
| | 5.3 | Lowering speed, laden/unladen | | m/s | 0.43/0.44 | 0.43/0.44 | 0.43/0.44 |
| | 5.5 | Drawbar pull, laden/unladen | | N | —— | —— | —— |
| | 5.6 | Max. drawbar pull, laden/unladen | | N | —— | —— | —— |
| | 5.8 | Max. gradeability, laden/unladen | | % | 15/15 | 15/15 | 15/15 |
| | 5.10 | Service brake | | | Hydraulic | Hydraulic | Hydraulic |
| | 5.11 | Parking brake | | | Mechanical | Mechanical | Mechanical |
| Electric-engine | 6.1 | Drive motor rating S2 60 min | | kW | 10 | 10 | 10 |
| | 6.2 | Lift motor rating at S3 15% | | kW | 16 | 16 | 16 |
| | 6.4 | Battery voltage/nominal capacity | | V/Ah | 80V205AH | 80V205AH | 80V280AH |
| | 6.5 | Battery weight | | kg | —— | —— | —— |
| Addition data | 8.1 | Type of drive control | | | AC | AC | AC |
| | 10.5 | Steering design | | | Hydraulic | Hydraulic | Hydraulic |
| | 10.7 | Sound pressure level at the driver's ear | | dB(A) | < 74 | < 74 | < 74 |

If there are improvements of technical parameters or configurations, no further notice will be given.
The diagram shown may contain non-standard configurations.

# Li-ion counterbalance forklift 2.5/3.0/3.5T

# EFL253S/303S/353S

| | | | | | | | |
|---|---|---|---|---|---|---|---|
| Distinguishing mark | 1.1 | Manufacturer | | | EP | EP | EP |
| | 1.2 | Model designation | | | EFL253S | EFL303S | EFL353S |
| | 1.3 | Drive | | | Electric | Electric | Electric |
| | 1.4 | Operator type | | | Seated | Seated | Seated |
| | 1.5 | Load capacity | Q | kg | 2500 | 3000 | 3500 |
| | 1.6 | Load center distance | c | mm | 500 | 500 | 500 |
| | 1.8 | Load distance, centre of drive axle to fork | x | mm | 495 | 481 | 486 |
| | 1.9 | Wheelbase | y | mm | 1740 | 1740 | 1740 |
| Service weight | 2.1 | Service weight | | kg | 3955 | 4305 | 4625 |
| | 2.2 | Axle loading, laden front/rear | | kg | 5795/660 | 6575/730 | 7355/770 |
| | 2.3 | Axle loading, unladen front/rear | | kg | 1865/2090 | 1880/2425 | 1870/2755 |
| Tyres/chassis | 3.1 | Tyre type | | | Solid rubber | Solid rubber | Solid rubber |
| | 3.2 | Tyre size, front | | | 7.00-12 | 28X9-15 | 28X9-15- |
| | 3.3 | Tyre size, rear | | | 18X7-8 | 200/50-10 | 200/50-10 |
| | 3.5 | Wheels, number front/rear (x=drive wheels) | | mm | 2x/ 2 | 2x/ 2 | 2x/ 2 |
| | 3.6 | Tread width, front | b10 | mm | 975 | 1010 | 1010 |
| | 3.7 | Tread width, rear | b11 | mm | 955 | 955 | 955 |
| Dimensions | 4.1 | Tilt of mast/fork carriage forward/backward | α/β | ° | 6/ 10 | 6/ 10 | 6/ 10 |
| | 4.2 | Retracted mast height | h1 | mm | 2090 | 2070 | 2070 |
| | 4.3 | Free lift | h2 | mm | 120 | 135 | 135 |
| | 4.4 | Lift height | h3 | mm | 3000 | 3000 | 3000 |
| | 4.5 | Height, mast extended | h4 | mm | 4025 | 4095 | 4095 |
| | 4.7 | Height of overhead guard (cabin) | h6 | mm | 2165 | 2180 | 2180 |
| | 4.8 | Seat height/standing height | h7 | mm | 1095 | 1110 | 1110 |
| | 4.12 | Tow coupling height | h10 | mm | 330 | 345 | 345 |
| | 4.19 | Overall length | l1 | mm | 3600 | 3610 | 3688 |
| | 4.20 | Length to face of forks | l2 | mm | 2530 | 2540 | 2618 |
| | 4.21 | Overall width | b1/b2 | mm | 1054 | 1210 | 1210 |
| | 4.22 | Fork dimensions | s/e/l | mm | 40×122×1070 | 45×122×1070 | 50×122×1070 |
| | 4.23 | A,B Fork carriage class/type A, B | | | 2A | 3A | 3A |
| | 4.24 | Fork carriage width | b3 | mm | 1040 | 1100 | 1100 |
| | 4.31 | Ground clearance, laden, below mast | m1 | mm | 125 | 130 | 130 |
| | 4.32 | Ground clearance, center of wheelbase | m2 | mm | 170 | 185 | 185 |
| | 4.34.1 | Aisle width for pallets 1000×1200 crossways | Ast | mm | 4000 | 4028 | 4091 |
| | 4.34.2 | Aisle width for pallets 800×1200 lengthways | Ast | mm | 4200 | 4228 | 4291 |
| | 4.35 | Turning radius | Wa | mm | 2305 | 2347 | 2405 |
| Performance data | 5.1 | Travel speed, laden/unladen | | km/h | 16/17 | 16/17 | 16/17 |
| | 5.2 | Lifting speed, laden/unladen | | m/s | 0.4/0.5 | 0.4/0.5 | 0.4/0.5 |
| | 5.3 | Lowering speed, laden/unladen | | m/s | 0.43/0.44 | 0.43/0.44 | 0.43/0.44 |
| | 5.5 | Drawbar pull, laden/unladen | | N | —— | —— | —— |
| | 5.6 | Max. drawbar pull, laden/unladen | | N | —— | —— | —— |
| | 5.8 | Max. gradeability, laden/unladen | | % | 20/25 | 20/25 | 18/25 |
| | 5.10 | Service brake | | | Hydraulic | Hydraulic | Hydraulic |
| | 5.11 | Parking brake | | | Mechanical | Mechanical | Mechanical |
| Electric-engine | 6.1 | Drive motor rating S2 60 min | | kW | 17 | 17 | 17 |
| | 6.2 | Lift motor rating at S3 15% | | kW | 26 | 26 | 26 |
| | 6.4 | Battery voltage/nominal capacity | | V/Ah | 80V230AH | 80V230AH | 80V280AH |
| | 6.5 | Battery weight | | kg | —— | —— | —— |
| Addition data | 8.1 | Type of drive control | | | AC | AC | AC |
| | 10.5 | Steering design | | | Hydraulic | Hydraulic | Hydraulic |
| | 10.7 | Sound pressure level at the driver's ear | | dB(A) | < 74 | < 74 | < 74 |

If there are improvements of technical parameters or configurations, no further notice will be given.
The diagram shown may contain non-standard configurations.

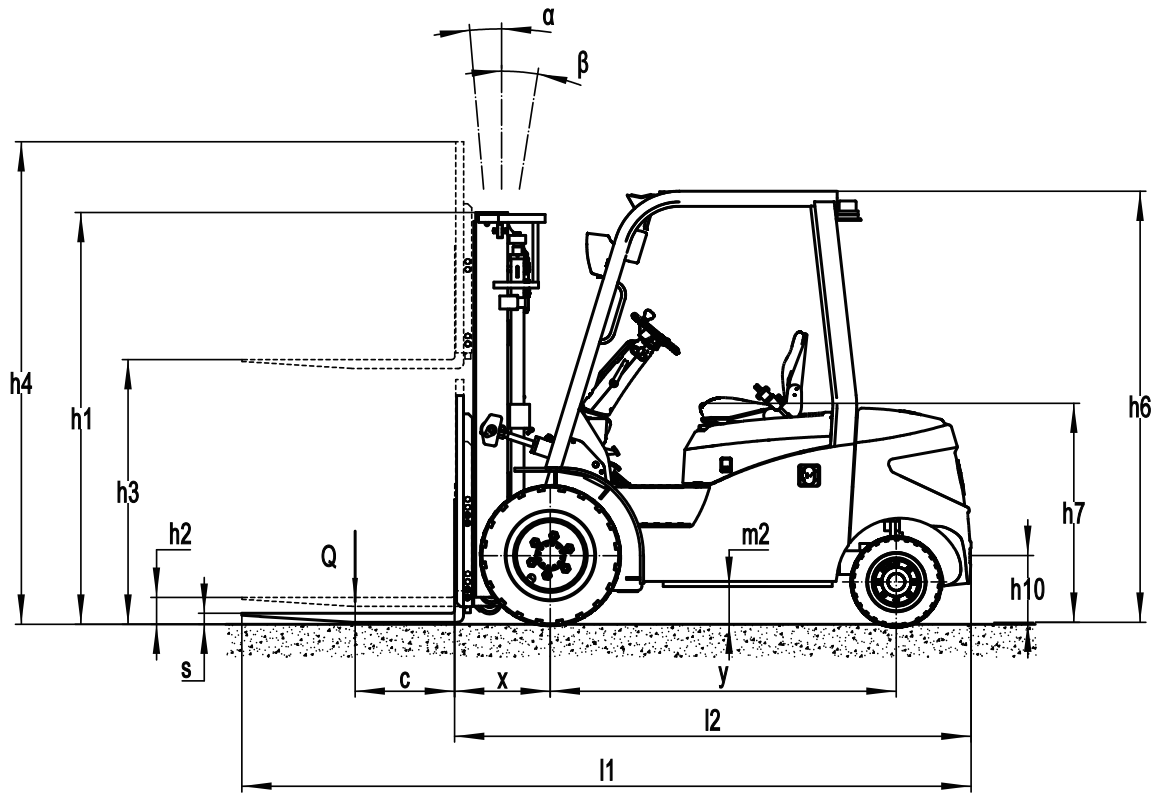
α
β
h4
h1
h3
h2
s
Q
m2
h6
h7
h10
c
x
y
l2
l1

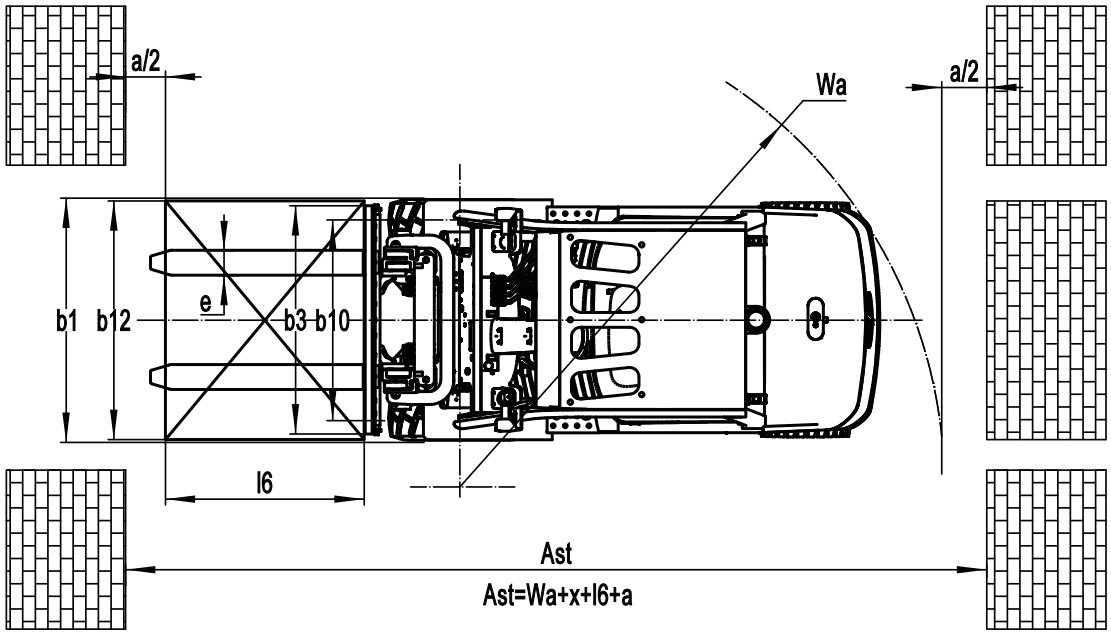
a/2
Wa
a/2
b1
b12
e
b3
b10
l6
Ast
Ast=Wa+x+l6+a

# Mast Option

## EFL253

| Mast types | Lift height ( h3 ) | Height, Mast | | | Height,Free lift(h2) | |
|---|---|---|---|---|---|---|
| | | Height, mast lowered(h1) | Height, mast extended(h4) | | No backrest | With backrest |
| | | | No backrest | With backrest | | |
| | mm | mm | mm | mm | mm | mm |
| 2-Standard Mast | 3000 | 2075 | 3565 | 4025 | 140 | 140 |
| | 3300 | 2225 | 3865 | 4325 | 140 | 140 |
| | 3600 | 2375 | 4165 | 4625 | 140 | 140 |
| | 4000 | 2625 | 4565 | 5025 | 140 | 140 |
| 2-Free Mast | 3000 | 2035 | 3565 | 4025 | 1470 | 1000 |
| | 3300 | 2185 | 3865 | 4325 | 1620 | 1150 |
| 3-Free Mast | 4300 | 2035 | 4865 | 5325 | 1470 | 1000 |
| | 4500 | 2115 | 5065 | 5525 | 1550 | 1080 |
| | 4800 | 2220 | 5365 | 5825 | 1655 | 1185 |
| | 5000 | 2305 | 5565 | 6025 | 1740 | 1270 |
| | 5500 | 2555 | 6065 | 6525 | 1990 | 1520 |
| | 6000 | 2805 | 6565 | 7025 | 2240 | 1770 |

## EFL303/353

| Mast types | Lift height ( h3 ) | Height, Mast | | | Height,Free lift(h2) | |
|---|---|---|---|---|---|---|
| | | Height, mast lowered(h1) | Height, mast extended(h4) | | No shelving | With shelving |
| | | | No shelving | With shelving | | |
| | mm | mm | mm | mm | mm | mm |
| 2-Standard Mast | 2700 | 1910 | 3330 | 3795 | 120 | 120 |
| | 3000 | 2060 | 3630 | 4095 | 120 | 120 |
| | 3300 | 2210 | 3930 | 4395 | 120 | 120 |
| | 3500 | 2310 | 4130 | 4595 | 120 | 120 |
| | 3600 | 2360 | 4230 | 4695 | 120 | 120 |
| | 4000 | 2610 | 4630 | 5095 | 120 | 120 |
| | 4300 | 2760 | 4930 | 5395 | 120 | 120 |
| | 4500 | 2860 | 5130 | 5595 | 120 | 120 |
| 2-Free Mast | 3000 | 2040 | 3630 | 4095 | 1410 | 945 |
| | 3300 | 2190 | 3930 | 4395 | 1560 | 1095 |
| | 3600 | 2340 | 4230 | 4695 | 1710 | 1245 |
| 3-Free Mast | 4300 | 2040 | 4930 | 5395 | 1410 | 945 |
| | 4500 | 2120 | 5130 | 5595 | 1490 | 1025 |
| | 4800 | 2225 | 5430 | 5895 | 1595 | 1130 |
| | 5000 | 2310 | 5630 | 6095 | 1680 | 1215 |
| | 5500 | 2560 | 6130 | 6595 | 1930 | 1465 |
| | 6000 | 2810 | 6630 | 7095 | 2180 | 1715 |

## RATED CAPACITIES

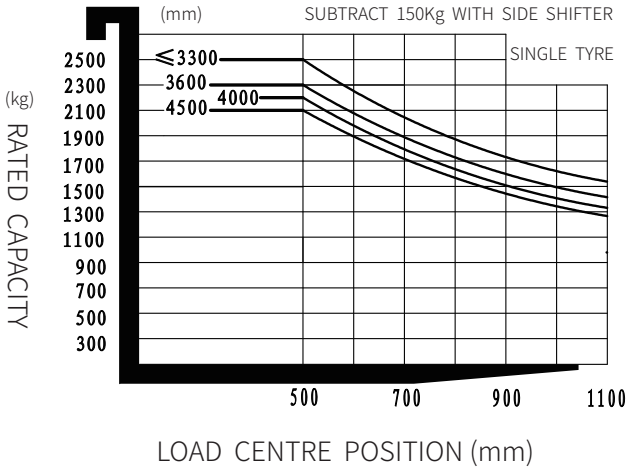


# Option

| No. | Optional items | EFL253 | EFL253S |
|---|---|---|---|
| 1.1 | Fork dimension | ○122*40*920 ○122*40*1070 ○122*40*1150 ○122*40*1220 ○122*40*1370 ○122*40*1500 ○122*40*1600 ○122*40*1700 ○122*40*1820 ○122*40*1900 ○122*40*2000 ○122*40*2200 | ○122*40*920 ○122*40*1070 ○122*40*1150 ○122*40*1220 ○122*40*1370 ○122*40*1500 ○122*40*1600 ○122*40*1700 ○122*40*1820 ○122*40*1900 ○122*40*2000 ○122*40*2200 |
| 1.4 | Fork carriage width | ●1040mm ○Yes and can be customized | ●1040mm ○Yes and can be customized |
| 1.5 | Fork carriage height | ●1025mm ○Yes and can be customized | ●1025mm ○Yes and can be customized |
| 2.5 | Front wheel material | ○Pneumati○Solid ○Non-marking | ○Pneumati○Solid ○Non-marking |
| 2.6 | Rear wheel material | ○Pneumati○Solid ○Non-marking | ○Pneumati○Solid ○Non-marking |
| 2.7 | Battery capacity | ○80V205AH○80V280AH○80V410AH | ○80V230AH○80V460AH |
| 2.8 | Charger | ○80V35A○80V65A○80V130A ○80V200A (only for 410Ah battery) ○80V35A (internal)○80V60A (internal) | ○80V35A○80V65A○80V130A ○80V200A (only for 460Ah battery) |
| 2.9 | Battery indicator | ●With time | |
| 2.10 | Seat type | ○Regular ○Premium ○Suspension ○Suspension + seatbelt logic switch | |
| 2.11 | Attachments | ●No ○Built-in sideshifter ○External shifter ○Fork positioner | |
| 2.13 | Traction pin | ●Yes | |
| 3.5 | Front lamp | ●LED | |
| 3.6 | Rear lamp | ●No ○LED | |
| 3.7 | Warning lamp | ●Yes | |
| 3.8 | Steering lamp | ●Yes | |
| 3.9 | Blue lamp | ●No○2 front○1 rear○2 front + 1 rear | |
| 3.10 | Area warning lamp | ●No ○1 left + 1 right (red) | |
| 3.11 | Rearview mirror | ●1 in the middle ○Add 1 on both sides | |
| 3.12 | Buzzer | ●Yes | |
| 3.17 | OPS system | ●Yes | |
| 3.23 | Telematics | ●Yes and not customized | |
| 4.3 | Cabin | ●No ○Basic semi-enclosed cabin ○Upgrade semi-enclosed cabin ○Full cabin | |
| 4.9 | Heater | ●No ○Yes and not customized | |

Note: ●Standard ○ Optional - Inconformity

## RATED CAPACITIES

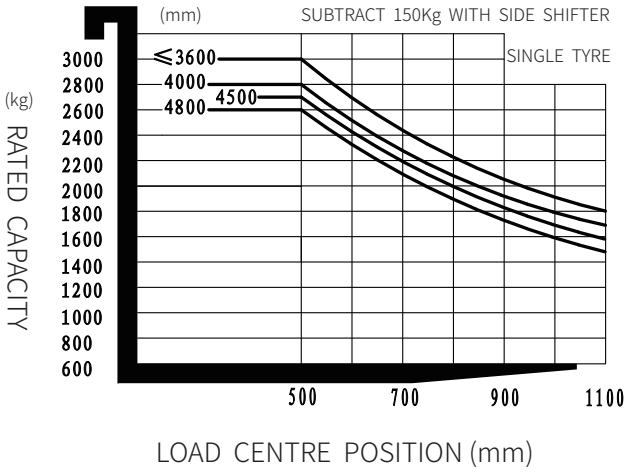


# Option

| No. | Optional items | EFL303 | EFL303(S) |
|---|---|---|---|
| 1.1 | Fork dimension | ○122*45*1070 ○122*45*1150 ○122*45*1220 ○122*45*1370 ○122*45*1520 ○122*45*1600 ○122*45*1700 ○122*45*1820 ○122*45*2000 ○122*45*2200 ○122*45*2400 | ○122*45*1070 ○122*45*1150 ○122*45*1220 ○122*45*1370 ○122*45*1520 ○122*45*1600 ○122*45*1700 ○122*45*1820 ○122*45*2000 ○122*45*2200 ○122*45*2400 |
| 1.4 | Fork carriage width | ●1100mm ○Yes and can be customized | ●1100mm ○Yes and can be customized |
| 1.5 | Fork carriage height | ●1095mm ○Yes and can be customized | ●1095mm ○Yes and can be customized |
| 2.5 | Front wheel material | ○Pneumati○Solid ○Non-marking | ○Pneumati○Solid ○Non-marking |
| 2.6 | Rear wheel material | ○Pneumati○Solid ○Non-marking | ○Pneumati○Solid ○Non-marking |
| 2.7 | Battery capacity | ○80V205AH○80V280AH○80V410AH | ○80V230AH○80V460AH |
| 2.8 | Charger | ○80V35A○80V65A○80V130A ○80V200A (only for 410Ah battery) ○80V35A (internal)○80V60A (internal) | ○80V65A○80V35A○80V130A ○80V200A (only for 460Ah battery) |
| 2.9 | Battery indicator | ●With time | |
| 2.10 | Seat type | ○Regular ○Premium ○Suspension ○Suspension + seatbelt logic switch | |
| 2.11 | Attachments | ●No ○Built-in sideshifter ○External shifter ○Fork positioner | |
| 2.13 | Traction pin | ●Yes | |
| 3.5 | Front lamp | ●LED | |
| 3.6 | Rear lamp | ●No ○LED | |
| 3.7 | Warning lamp | ●Yes | |
| 3.8 | Steering lamp | ●Yes | |
| 3.9 | Blue lamp | ●No○2 front○1 rear○2 front + 1 rear | |
| 3.10 | Area warning lamp | ●No ○1 left + 1 right (red) | |
| 3.11 | Rearview mirror | ●1 in the middle ○Add 1 on both sides | |
| 3.12 | Buzzer | ●Yes | |
| 3.17 | OPS system | ●Yes | |
| 3.23 | Telematics | ●Yes and not customized | |
| 4.3 | Cabin | ●No ○Basic semi-enclosed cabin ○Upgrade semi-enclosed cabin ○Full cabin | |
| 4.9 | Heater | ●No ○Yes and not customized | |

Note: ●Standard ○ Optional - Inconformity

## RATED CAPACITIES

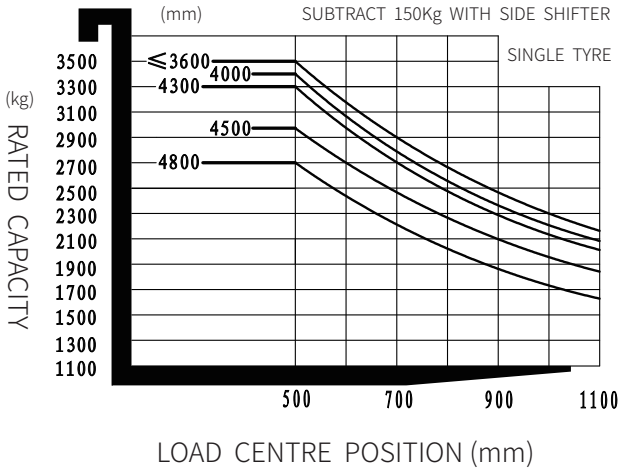


# Option

| No. | Optional items | EFL353 | EFL353(S) |
|---|---|---|---|
| 1.1 | Fork dimension | ○122*50*1070 ○122*50*1150 ○122*50*1220 ○122*50*1370 ○122*50*1520 ○122*50*1600 ○122*50*1700 ○122*50*1820 ○122*50*2000 ○122*50*2200 ○122*50*2420 | ○122*50*1070 ○122*50*1150 ○122*50*1220 ○122*50*1370 ○122*50*1520 ○122*50*1600 ○122*50*1700 ○122*50*1820 ○122*50*2000 ○122*50*2200 ○122*50*2420 |
| 1.4 | Fork carriage width | ●1100mm ○Yes and can be customized | ●1100mm ○Yes and can be customized |
| 1.5 | Fork carriage height | ●1095mm ○Yes and can be customized | ●1095mm ○Yes and can be customized |
| 2.5 | Front wheel material | ○Pneumati○Solid ○Non-marking | ○Pneumati○Solid ○Non-marking |
| 2.6 | Rear wheel material | ○Pneumati○Solid ○Non-marking | ○Pneumati○Solid ○Non-marking |
| 2.7 | Battery capacity | ○80V280AH○80V410AH | ○80V280AH○80V460AH |
| 2.8 | Charger | ○80V35A○80V65A○80V130A ○80V200A (only for 410Ah battery) ○80V35A (internal)○80V60A (internal) | ○80V65A○80V35A○80V130A ○80V200A (only for 460Ah battery) |
| 2.9 | Battery indicator | ●With time | |
| 2.10 | Seat type | ○Regular ○Premium ○Suspension ○Suspension + seatbelt logic switch | |
| 2.11 | Attachments | ●No ○Built-in sideshifter ○External shifter ○Fork positioner | |
| 2.13 | Traction pin | ●Yes | |
| 3.5 | Front lamp | ●LED | |
| 3.6 | Rear lamp | ●No ○LED | |
| 3.7 | Warning lamp | ●Yes | |
| 3.8 | Steering lamp | ●Yes | |
| 3.9 | Blue lamp | ●No○2 front○1 rear○2 front + 1 rear | |
| 3.10 | Area warning lamp | ●No ○1 left + 1 right (red) | |
| 3.11 | Rearview mirror | ●1 in the middle ○Add 1 on both sides | |
| 3.12 | Buzzer | ●Yes | |
| 3.17 | OPS system | ●Yes | |
| 3.23 | Telematics | ●Yes and not customized | |
| 4.3 | Cabin | ●No ○Basic semi-enclosed cabin ○Upgrade semi-enclosed cabin ○Full cabin | |
| 4.9 | Heater | ●No ○Yes and not customized | |

Note: ●Standard ○ Optional - Inconformity